BlackHeat™

Vacuum Assisted Linear, Double Linear, U-Tube, and Multi-Burner Gas Fired Heating Systems.

Approval # GMK 10568

Installation, Operation & Service Manual

CMP30DL
CMP40DL
CMP50DL
CMP60DL
CMP70DL

CMP15UT
CMP20UT
CMP25UT
CMP30UT
CMP35UT
CMP40UT
CMP45UT
CMP50UT

CMP15ST
CMP20ST
CMP25ST
CMP30ST
CMP35ST
CMP40ST
CMP45ST
CMP50ST
CMP55ST

⚠ WARNING

Improper installation, adjustment, alteration, service or maintenance can result in death, injury or property damage. Read the installation, operation and service manual thoroughly before installing or servicing this equipment.

Installation must be done by a registered installer/ contractor qualified in the installation and service of gas-fired heating equipment or your gas supplier.

Installer
Please take the time to read and understand these instructions prior to any installation.
Installer must give a copy of this manual to the owner.

Owner
Keep this manual in a safe place in order to provide your service technician with necessary information.

Combat®

Heating Solutions Limited

Combat Heating Solutions Limited
Unit 20 Red Mill Trading Estate
Rigby Street, Wednesbury,
West Midlands, WS10 0NP, UK

Hurll Nu-Way Pty Ltd,
14 Aristoc Road,
GLEN WAVERLEY VIC 3150
1300 556 380
www.hnw.com.au

Nu-Way Energy [NZ] Pty Ltd
Unit 6, 123 Cryers Road
East Tamaki, NZ
+64 9 274 5111
www.nuwayenergy.co.nz

FOR YOUR SAFETY If you smell gas:

1. Open windows.
2. DO NOT try to light any appliance.
3. DO NOT use electrical switches.
4. DO NOT use any telephone in your building.
5. Extinguish any open flame.
6. Leave the building.
7. Immediately call your local gas supplier after leaving the building. Follow the gas supplier's instructions.
8. If you cannot reach your gas supplier, call Emergency Services

⚠ WARNING

DO NOT SPRAY AEROSOLS IN THE VICINITY OF THIS APPLIANCE WHILE IT IS IN OPERATION.
DO NOT USE OR STORE FLAMMABLE MATERIALS IN OR NEAR THIS APPLIANCE.
DO NOT PLACE ARTICLES ON OR AGAINST THIS APPLIANCE.
DO NOT MODIFY THIS APPLIANCE.

TABLE OF CONTENTS

SECTION 1: Heater Safety 4
1.1 Manpower Requirements 4
1.2 Safety Labels and Their Placement 4
2.1 Low Level User Instructions 6
2.2 Corrosive Chemicals 6
2.3 National Standards and Applicable Codes 6
SECTION 3: Clearances to Combustibles 7
3.1 Required Clearances to Combustibles 7
3.2 Clearance Data - Linear and Double Linear 8
3.3 Clearance Data -U Tube 10
SECTION 4: Major Component Descriptions 12
SECTION 5: General Suspension Details 13
SECTION 6: Linear & Double Linear Heater Installation 15
6.1 Linear Standard Parts List 15
6.2 Double Linear Standard Parts List 18
SECTION 7: U-Tube Heater Installation 27
7.1 U-Tube Standard Parts List 27
SECTION 8: Multiburner Configuration & Installation 37
8.1 Initial Assembly 37
SECTION 9: Burner & Fan Installation 39
9.3 Linear & U-Tube Fan Installation 40
SECTION 10: Optional Heater Accessories 43
10.1 Reflector Side Extension Installation 44
10.2 U-Tube Cover Installation 45
10.3 Decorative Grille Installation 46
10.4 Sports Hall Guard Installation 47
10.5 Undershield Installation 48
10.6 Wall Mounting 49
SECTION 11: Venting 51
11.1 General Venting Requirements 51
11.2 Ventilation Requirements 51
11.3 Outside Combustion Air Supply 52
11.4 Common Duct 53
SECTION 12: Gas Piping 54
SECTION 13: Wiring 56
13.1 Typical External Wiring Diagram (Linear or U-Tube) 56
13.2 Typical External Wiring Diagram (Double Linear Option 2) 57
13.3 Typical External Wiring Diagram (Multiburner) 57
13.4 Internal Wiring Diagram 58
SECTION 14: Operation 59
14.1 Heater Lockout Indication 59
14.2 Testing 60
14.3 Commissioning (Multiburner) 60
14.4 System Checks 60
14.5 User Instructions 60
SECTION 15: Servicing Instructions 61
15.1 Annual Procedure 61
15.2 Component Removal 61
15.3 Maintenance Checklist 62
SECTION 16: Troubleshooting 64
16.1 Troubleshooting Flow Chart (Linear, Double Linear and U-Tube) 65
16.2 Troubleshooting Flow Chart (Multiburner) 67
16.3 Manifold Gas Pressure Setting 69
SECTION 17: Replacement Parts 70
SECTION 18: Specifications 72
18.1 Material Specifications 72
18.2 Heater Specifications 72
18.3 Venting Specifications 72
18.4 Suspension Specifications 72
18.5 Controls Specifications 72
18.6 Environment 72
18.7 Linear Heater 73
18.8 Double Linear Heater 73
18.9 U-Tube Heater 73
18.10 Burner Specifications 74

Note that Approval # GMK 10568 applies to all Straight, U-Tube and Double Linear appliances except for CMP55 which is NOT approved for use in Australia or New Zealand.

These appliances shall be installed by suitably qualified personnel in accordance with the requirements of AS/NZS 5601-2014 [or later edition]; this appliance manual and any other codes or standards which may apply to the installation.

Any Multiburner installation would be classified as a Type B installation requiring approval by the local Energy Regulator.

© 2018 Combat Heating Solutions Limited

All rights reserved. No part of this work covered by the copyrights herein may be reproduced or copied in any form or by any means - graphic, electronic, or mechanical, including photocopying, recording, taping or information storage and retrieval systems - without the written permission of Combat Heating Solutions Limited.

TABLE OF FIGURES

Figure 1: Side and Back Panel Label Placement.....4
Figure 2: Top Panel Label Placement 5
Figure 18: Critical Hanger Placement 14
Figure 19: Linear General Assembly Overview.....16
Figure 20: Linear Layout Overview 17
Figure 21: Double Linear General Assembly Overview 19
Figure 22: Double Linear Layout Overview 20
Figure 23: U-Tube Assembly Overview 29
Figure 24: U-Tube Layout Overview 30
Figure 25: Multiburner Damper Flange Installation 37
Figure 26: Typical Manifold Layout (Linear and U-Tube Configuration).....38
Figure 27: U-Tube (Horizontal) 49
Figure 28: U-Tube (Angle Mounted) 50
Figure 29: Linear 50
Figure 30: Individual Flue Connection Detail.....52
Figure 31: Flue Connection Dimensions 52
Figure 32: Fresh Air Intake Spigot.....53
Figure 33: Air Supply with Flue Configurations 53
Figure 34: Gas Connection with Stainless Steel Flex Connector.....55
Figure 35: Sequence of Operation Chart 59
Figure 36: Burner Cup Position 61
Figure 37: Linear and U-Tube Specifications 74

Note that all appliances may have the prefix BH [Blackheat] or CMP [Complete] in the Model Code.
eg. BH15ST is identical to CMP15ST [15 kW Straight Tube].

Product Approval

COMBAT® equipment has been tested and CE certified as complying with the essential requirements of the Gas Appliance Directive, the Low Voltage Directive, the Electromagnetic Compatibility Directive and the Machinery Directive for use on natural gas and LPG when installed, commissioned and maintained in accordance with these instructions.

These instructions refer to appliances designed to operate in the European Union.

Appliances designed for other countries (Non-European Union) are available on request.

This appliance must be installed in accordance with the local and national codes in force and used only in a sufficiently ventilated space, as specified in these instructions.

Before installation, check that the local gas distribution systems, nature of gas and pressure, and adjustment of the appliance are compatible.

Your Safety is Important to Us!

This symbol is used throughout the manual to notify you of possible fire, electrical or burn hazards. Please pay special attention when reading and following the warnings in these sections.

Installation, service and annual inspection of heater must be done by a registered installer/contractor qualified in the installation and service of gas-fired heating equipment.

Read this manual carefully before installation, operation or service of this equipment.

This heater is designed for heating non residential indoor spaces. Do not install in residential spaces. These instructions, the layout drawing, local codes and ordinances, and applicable standards that apply to gas piping, electrical wiring, venting, etc., must be thoroughly understood before proceeding with the installation.

Protective gear is to be worn during installation, operation and service. Thin sheet metal parts, such as the reflector portion of the heater and the various venting components, have sharp edges. To prevent injury, the use of work gloves is recommended. The use of gloves will also prevent the transfer of body oils from the hands to the surface of the reflector.

Before installation, check that the local distribution conditions, nature of gas and pressure, and adjustment of the appliance are compatible.

The heater must be applied and operated under the general concepts of reasonable use and installed using best building practices.

This appliance is not intended for use by persons (including children) with reduced physical, sensory or mental capabilities, or lack of experience and knowledge, unless they have been given supervision or instruction concerning use of the appliance by a person responsible for their safety. Children should be supervised to ensure that they do not play with the appliance.

For additional copies of the Installation, Operation and Service Manual, please contact Combat Heating Solutions Limited.

1.1 Manpower Requirements

To prevent personal injury and damage to the heater, two persons will be required for installation.

1.2 Safety Labels and Their Placement

Product safety signs or labels should be replaced by the product user when they are no longer legible. Contact Combat Heating Solutions Limited for obtaining replacement signs or labels.

See Page 4, Figure 1 through Page 5, Figure 2.

Figure 1: Side and Back Panel Label Placement

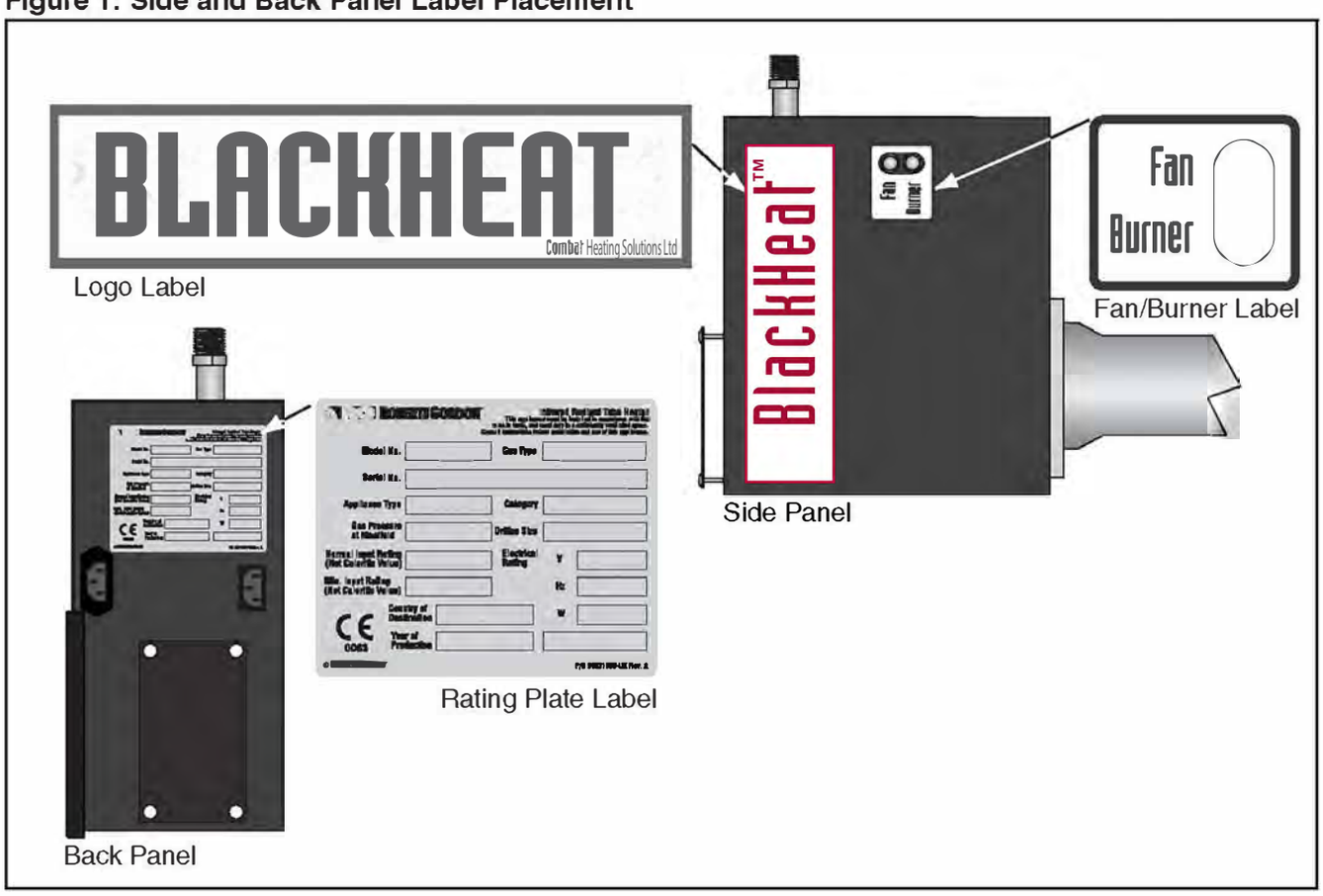

Figure 2: Top Panel Label Placement

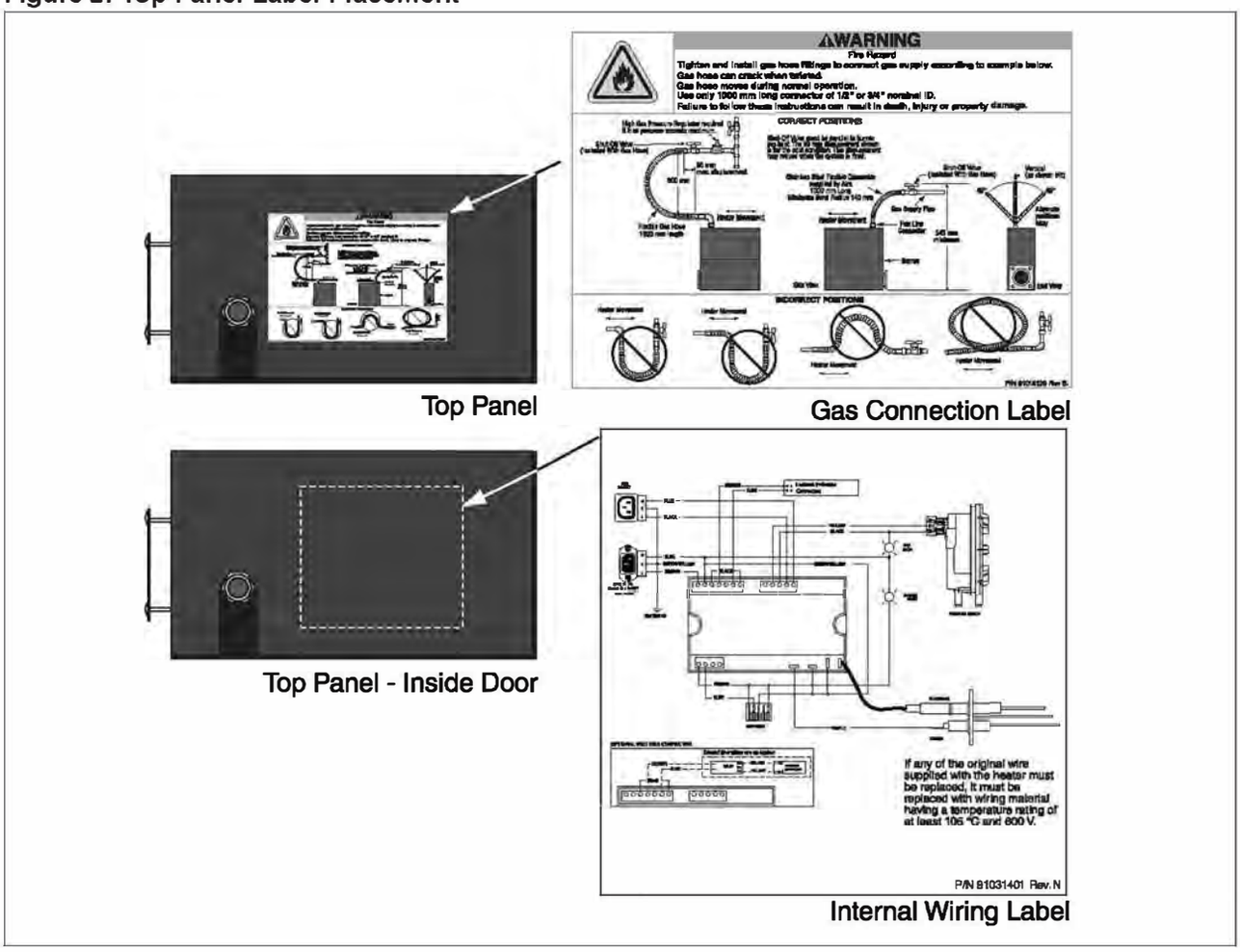

SECTION 2: INSTALLER RESPONSIBILITY

- To install the heater, as well as the gas and electrical supplies, in accordance with applicable specifications and codes. Combat Heating Solutions Limited recommends the installer contact a local Building Inspector or Fire Marshal for guidance.
- To use the information given in a layout drawing and in the manual together with the cited codes and regulations to perform the installation.
- To install the heater in accordance with the clearances to combustibles.
- To furnish all needed materials not furnished as standard equipment.
- To plan location of supports.
- To provide access to burners for servicing on all sides, for burner removal.
- To provide the owner with a copy of this installation, operation and service manual.
- To never use heater as support for a ladder or other access equipment and never hang or suspend anything from heater.
- To ensure there is adequate air circulation around the heater and to supply air for combustion, ventilation and distribution in accordance with local codes.
- To safely and adequately install heater using materials with a minimal working load of 33 kg.
- To ensure the heater is placed in an approved application.

2.1 Low Level User Instructions

In all situations, clearances to combustibles must be maintained. Signs should be posted in storage areas to specify the maximum stacking height of items placed below heater to maintain required clearances to combustibles. Minimum clearances must be maintained from vehicles parked below the heater. Caution should be used when running the system near combustible materials such as wood, paper, rubber, etc. Consideration should be given to partitions, storage racks, hoists, building construction, etc.

A laminated wall tag is available for the heater as a permanent reminder of the safety instructions and the importance of the required clearances to combustibles. Please contact Combat Heating Solutions Ltd. or your COMBAT Heating Solutions Ltd. independent distributor to obtain the wall tag. Affix the tag by peeling off the backing of the adhesive strips on the rear surface and position the tag on a wall near the heater (e.g. thermostat or COMBAT Heating Solutions Ltd. Controller).

A copy of the wall tag (P/N 91037912) is illustrated on the back cover. This copy of the wall tag can be affixed on the wall near the heater. Know your model number and installed configuration. Model number and installed configuration are found on the burner and in the Installation, Operation and Service Manual. Write the largest clearance dimensions with permanent ink according to your model number and configuration in the open spaces on the tag.

2.2 Corrosive Chemicals

⚠ CAUTION

Product Damage Hazard

Do not use heater in area containing corrosive chemicals.

Refer to appropriate Material Safety Data Sheets (MSDS).

Failure to follow these instructions can result in product damage.

Combat Heating Solutions Limited cannot be responsible for ensuring that all appropriate safety measures are undertaken prior to installation; this is entirely the responsibility of the installer. It is essential that the contractor, the sub-contractor, or the owner identifies the presence of combustible materials, corrosive chemicals or halogenated hydrocarbons* anywhere in the premises.

** **Halogenated Hydrocarbons** are a family of chemical compounds characterized by the presence of halogen elements (fluorine, chlorine, bromine, etc.). These compounds are frequently used in refrigerants, cleaning agents, solvents, etc. If these compounds enter the air supply of the burner, the lifespan of the heater components will be greatly reduced. An outside air supply must be provided to the burners whenever the presence of these compounds is suspected. Warranty will be invalid if the heater is exposed to halogenated hydrocarbons.*

2.3 National Standards and Applicable Codes

All appliances must be installed in accordance with the latest revision of the applicable standards and national codes. This refers also to the electric, gas and venting installation. Note: Additional standards for installations in public garages, aircraft hangars, etc. may be applicable.

Appliances must be installed by suitably qualified personnel in accordance with the requirements of AS/NZS 5601 - 2014 or later edition.
Appliances must be commissioned in accordance with AS/NZS 5601 and this appliance manual.

SECTION 3: CLEARANCES TO COMBUSTIBLES

⚠ WARNING

Fire Hazard

Keep all flammable objects, liquids and vapors the minimum required clearances to combustibles away from heater.

Some objects will catch fire or explode when placed close to heater.

Failure to follow these instructions can result in death, injury or property damage.

3.1 Required Clearances to Combustibles

Clearances are the required distances that combustible objects must be away from the heater to prevent fire hazards. Caution should be used when running the system near combustibles. Combustibles are materials, which may catch on fire and include common items such as wood, paper, rubber, fabric, etc. **Maintain clearances to combustibles at all times for safety.**

Clearances for all heater models are located *on Page 8, Figure 3 through Page 11, Figure 17* in this manual. Check the clearances on each burner for the model heater being installed to make sure the product is suitable for your application and the clearances are maintained. Read and follow the safety guidelines below:

- Keep petrol or other combustible materials including flammable objects, liquids, dust or vapours away from this heater or any other appliance.
- Do not spray aerosols in the vicinity of this appliance.
- The stated clearances to combustibles represents a surface temperature of 50° C (90° F) above room temperature. Building materials with a low heat tolerance (such as plastics, vinyl siding, canvas, tri-ply, etc) may be subject to degradation at lower temperatures. It is the installer's responsibility to assure that adjacent materials are protected from degradation.
- Maintain clearances from heat sensitive equipment and workstations.
- Maintain clearances from vehicles parked below the heater.
- Maintain clearances from swinging and overhead doors, overhead cranes, vehicle lifts, partitions, storage racks, hoists, building construction, etc.
- In locations used for the storage of combustible materials, signs must be posted to specify the maximum permissible stacking height to maintain required clearances from the heater to the combustibles. Signs must be posted adjacent to the heater thermostat. In the absence of a thermostat, signs must be posted in a conspicuous location.
- Consult local Building Inspector, Fire Insurance Carrier or other authorities for approval of proposed installation when there is a possibility of exposure to combustible airborne materials or vapours.
- Hang heater in accordance to the minimum suspension requirements on *Page 73, Section 18.7 through Section 18.9*.
- If the radiant tubes must pass through the building structure, be sure that adequate sleeving and fire stop is installed to prevent scorching and/or fire hazard.

3.2 Clearance Data - Linear and Double Linear

BH or CMP prefix applies. eg. BH15ST = CMP15ST

NOTE:
1. All dimensions are from the surfaces of all tubes, couplings, tees, elbows and crosses.
2. Clearances B, C and D can be reduced by 50% after 7500 mm of tubing downstream from the burner.
3. All measurements are in millimeters.

FIGURE 3: LINEAR & DOUBLE LINEAR, HORIZONTAL MOUNTS

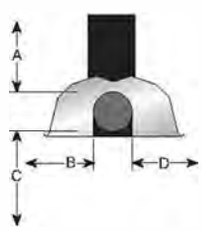

Model	CMP15ST CMP30DL	CMP20ST CMP40DL	CMP25ST CMP50DL	CMP30ST CMP60DL	CMP35ST CMP70DL	CMP40ST	CMP45ST	CMP50ST
A	150	150	150	150	150	150	200	200
B	890	970	970	1020	1170	1220	1280	1330
C	1570	1650	1650	1780	1930	1970	2010	2080
D	890	970	970	1020	1170	1220	1280	1330

FIGURE 4: LINEAR & DOUBLE LINEAR, ONE SIDE REFLECTOR

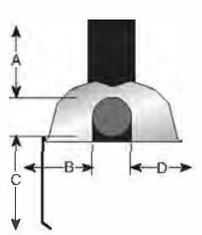

Model	CMP15ST CMP30DL	CMP20ST CMP40DL	CMP25ST CMP50DL	CMP30ST CMP60DL	CMP35ST CMP70DL	CMP40ST	CMP45ST	CMP50ST
A	150	150	150	150	150	150	200	200
B	230	230	230	230	230	230	230	230
C	1580	1760	1760	1930	2090	2130	2160	2240
D	1200	1380	1380	1500	1660	1710	1760	1860

FIGURE 5: LINEAR & DOUBLE LINEAR, TWO SIDE REFLECTORS

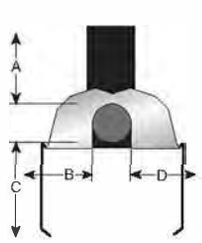

Model	CMP15ST CMP30DL	CMP20ST CMP40DL	CMP25ST CMP50DL	CMP30ST CMP60DL	CMP35ST CMP70DL	CMP40ST	CMP45ST	CMP50ST
A	150	150	150	150	150	150	200	200
B	590	640	640	690	820	860	890	1020
C	1660	1810	1810	1960	2110	2160	2210	2320
D	590	640	640	690	820	860	890	1020

FIGURE 6: LINEAR & DOUBLE LINEAR, 45° MOUNT

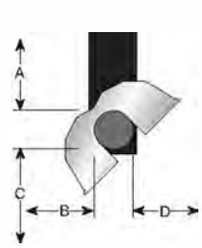

Model	CMP15ST CMP30DL	CMP20ST CMP40DL	CMP25ST CMP50DL	CMP30ST CMP60DL	CMP35ST CMP70DL	CMP40ST	CMP45ST	CMP50ST
A	200	200	200	250	250	275	300	300
B	200	200	200	200	200	200	200	200
C	1500	1660	1660	1860	1960	2030	2110	2160
D	1370	1520	1520	1630	1750	1820	1880	2000

NOTE:
1. All dimensions are from the surfaces of all tubes, couplings, tees, elbows and crosses.
2. Clearances B, C and D can be reduced by 50% after 7500 mm of tubing downstream from the burner.
3. All measurements are in millimeters.

FIGURE 7: LINEAR & DOUBLE LINEAR, 2 FOOT DECO GRILLE

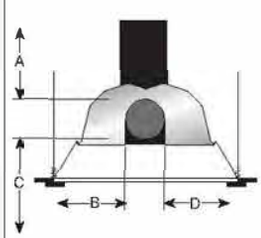

Model	CMP15ST CMP30DL	CMP20ST CMP40DL	CMP25ST CMP50DL	CMP30ST CMP60DL	CMP35ST CMP70DL	CMP40ST	CMP45ST	CMP50ST
A	150	150	150	150	150	150	200	200
B	890	970	970	1020	1170	1220	1280	1330
C	1570	1650	1650	1780	1930	1970	2010	2080
D	890	970	970	1020	1170	1220	1280	1330

FIGURE 8: LINEAR & DOUBLE LINEAR, PROTECTIVE GRILLE

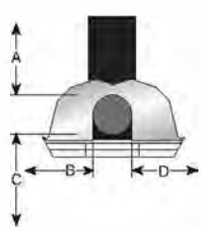

Model	CMP15ST CMP30DL	CMP20ST CMP40DL	CMP25ST CMP50DL	CMP30ST CMP60DL	CMP35ST CMP70DL	CMP40ST	CMP45ST	CMP50ST
A	150	150	150	150	150	150	200	200
B	890	970	970	1020	1170	1220	1280	1330
C	1570	1650	1650	1780	1930	1970	2010	2080
D	890	970	970	1020	1170	1220	1280	1330

FIGURE 9: UNDERSHIELD **

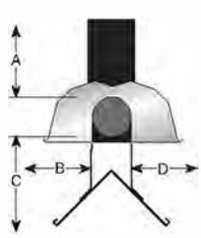

Model	CMP15ST CMP30DL	CMP20ST CMP40DL	CMP25ST CMP50DL	CMP30ST CMP60DL	CMP35ST CMP70DL	CMP40ST	CMP45ST	CMP50ST
A	150	150	150	150	150	150	-	-
B	990	1020	1270	1270	1370	1400	-	-
C	840	965	1120	1120	1220	1270	-	-
D	990	1020	1270	1270	1370	1400	-	-

** When installed in the first 6 m - Not for use on EF models.

FIGURE 10: LINEAR & DOUBLE LINEAR, VENTING

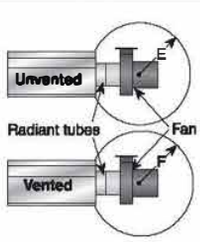

Model	CMP15ST CMP30DL	CMP20ST CMP40DL	CMP25ST CMP50DL	CMP30ST CMP60DL	CMP35ST CMP70DL	CMP40ST	CMP45ST	CMP50ST
E	1000	1000	1000	1000	1000	1000	1000	1000
F	500	500	500	500	500	500	500	500

3.3 Clearance Data -U Tube

NOTE:
1. All dimensions are from the surfaces of all tubes, couplings, tees, elbows and crosses.
2. Clearances B, C and D can be reduced by 50% after 7500 mm of tubing downstream from the burner.
3. All measurements are in millimeters.
4. Add 60 mm clearance to uncovered U-tube.

FIGURE 11: U-TUBE, HORIZONTAL MOUNT

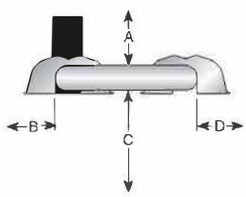

Model	CMP15UT	CMP20UT	CMP25UT	CMP30UT	CMP35UT	CMP40UT	CMP45UT	CMP50UT
A	150	150	150	150	150	150	200	200
B	890	970	970	1020	1170	1220	1270	1380
C	1580	1730	1730	1910	1980	2050	2110	2210
D	760	940	940	1000	1090	1150	1200	1300

FIGURE 12: U-TUBE, ONE SIDE REFLECTOR

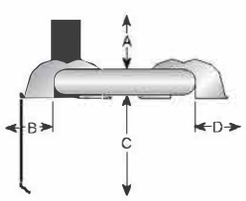

Model	CMP15UT	CMP20UT	CMP25UT	CMP30UT	CMP35UT	CMP40UT	CMP45UT	CMP50UT
A	150	150	150	150	150	150	200	200
B	230	230	230	230	230	230	230	230
C	1580	1760	1760	1930	2090	2130	2160	2240
D	1200	1380	1380	1500	1660	1710	1760	1860

FIGURE 13: U-TUBE, TWO SIDE REFLECTORS

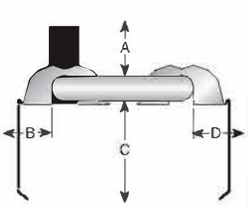

Model	CMP15UT	CMP20UT	CMP25UT	CMP30UT	CMP35UT	CMP40UT	CMP45UT	CMP50UT
A	150	150	150	150	150	150	200	200
B	590	640	640	690	820	860	890	1020
C	1660	1810	1810	1960	2110	2160	2210	2320
D	590	640	640	690	820	860	890	1020

FIGURE 14: U-TUBE, FULL 45° MOUNT

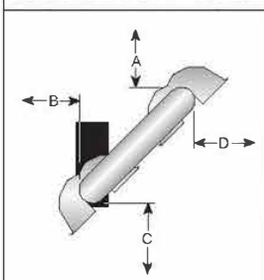

Model	CMP15UT	CMP20UT	CMP25UT	CMP30UT	CMP35UT	CMP40UT	CMP45UT	CMP50UT
A	200	200	200	200	200	200	200	200
B	200	200	200	200	200	200	200	200
C	1500	1650	1650	1860	1960	2040	2110	2160
D	1070	1170	1170	1320	1550	1620	1680	1780

NOTE:
1. All dimensions are from the surfaces of all tubes, couplings, tees, elbows and crosses.
2. Clearances B, C and D can be reduced by 50% after 7500 mm of tubing downstream from the burner.
3. All measurements are in millimeters.
4. Add 60 mm clearance to uncovered U-tube.

FIGURE 15: U-TUBE, OPPOSITE 45° TILT

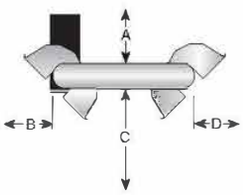

Model	CMP15UT	CMP20UT	CMP25UT	CMP30UT	CMP35UT	CMP40UT	CMP45UT	CMP50UT
A	200	200	200	250	250	275	300	300
B	1370	1530	1530	1630	1780	1830	1880	1930
C	1500	1650	1650	1860	1960	2040	2110	2160
D	560	560	560	560	560	560	560	560

FIGURE 16: U-TUBE, PROTECTIVE GRILLE

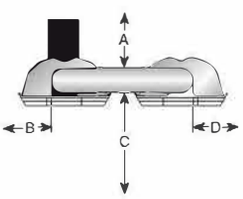

Model	CMP15UT	CMP20UT	CMP25UT	CMP30UT	CMP35UT	CMP40UT	CMP45UT	CMP50UT
A	150	150	150	150	150	150	200	200
B	890	970	970	1020	1170	1220	1270	1380
C	1580	1730	1730	1910	1980	2050	2110	2210
D	760	940	940	1000	1090	1150	1200	1300

FIGURE 17: U-TUBE, VENTING

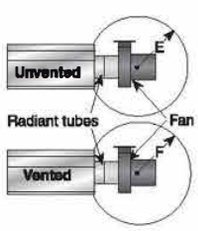

Model	CMP15UT	CMP20UT	CMP25UT	CMP30UT	CMP35UT	CMP40UT	CMP45UT	CMP50UT
E	1000	1000	1000	1000	1000	1000	1000	1000
F	500	500	500	500	500	500	500	500

SECTION 4: MAJOR COMPONENT DESCRIPTIONS

Burner (shown with Tube Gasket)

Must be installed with the flame observation window facing down.

Reflector (Aluminium or Stainless Steel)

Alternate overlap as shown on overview. Minimum overlap is 160 mm.

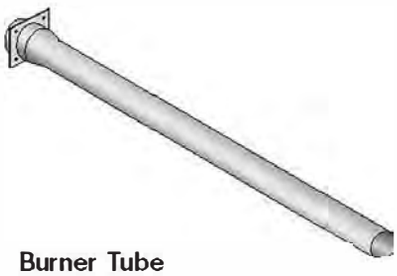

Burner Tube

Supplied in 3,000 mm lengths. Burner tube is always the first tube after the burner.

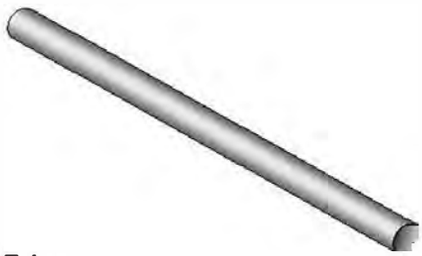

Tube

Heat treated aluminised tube supplied in 3,000 mm lengths.

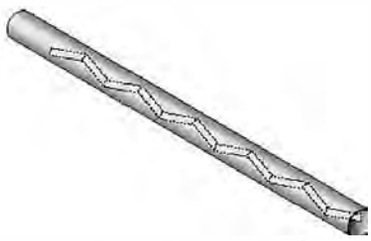

Fan Tube with Internal Swirler

Supplied in 3,000 mm lengths. Fan tube is always the last tube on the heater where the fan is attached.

The swirler is welded to the inside of the tube end.

Tube and Reflector Hanger with Clamp Package

Position this hanger no more than 100 mm away from the burner assembly.

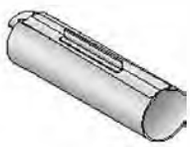

Coupling Assembly with Lock

Tube and Reflector Hanger

Suspend system from these hangers.

Reflector End Cap

Punch out center section to accommodate tube.

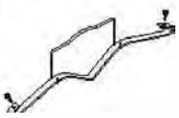

Reflector Support Strap, Wire Form & #8 x 3/4 (3.9 x 19mm) Screw

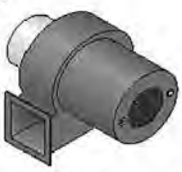

Fan Assembly (Includes Flange)

Fan Assembly is attached to the last section of heat exchanger tubing (Fan Tube).

Flex Gas Line

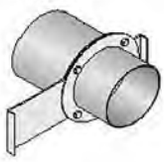

Damper Flange Assembly

For use on Multiburner Systems.

Fan Flange Assembly and Screws

Tee Assembly

Height Adjuster

U-Tube

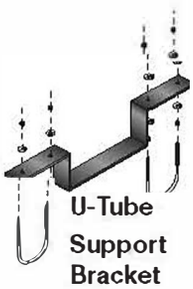

U-Tube Support Bracket

Spring Hook

Bow Shackle

SECTION 5: GENERAL SUSPENSION DETAILS

⚠ WARNING

Severe Injury Hazard

Secure burner to burner tube with nuts and lockwashers.

Hang heater with materials with a minimum working load of 75 lbs (33 kg).

Failure to follow these instructions can result in death, injury or property damage.

⚠ WARNING

Cut/Pinch Hazard

Wear protective gear during installation, operation and service.

Edges are sharp.

Failure to follow these instructions can result in injury.

To ensure your safety, and comply with the terms of the warranty, all units must be installed in accordance with these instructions.

The gas or the electrical supply lines must not be used to support the heater.

Do not locate the gas or electric supply lines directly over the path of the flue products from the heater.

The heater must be installed in a location that it is readily accessible for servicing.

The heater must be installed in accordance with clearances to combustibles as indicated in this manual.

The minimum and maximum gas inlet pressures must be maintained as indicated on the rating plate. Typical installation configurations are shown *on Page 14, Figure 18*.

Suspension chain is not supplied as standard equipment.

Note: Some models will receive S-hooks (P/N 91907302) or spring hooks (P/N 91903300), rather than bow shackles.

Figure 18: Critical Hanger Placement

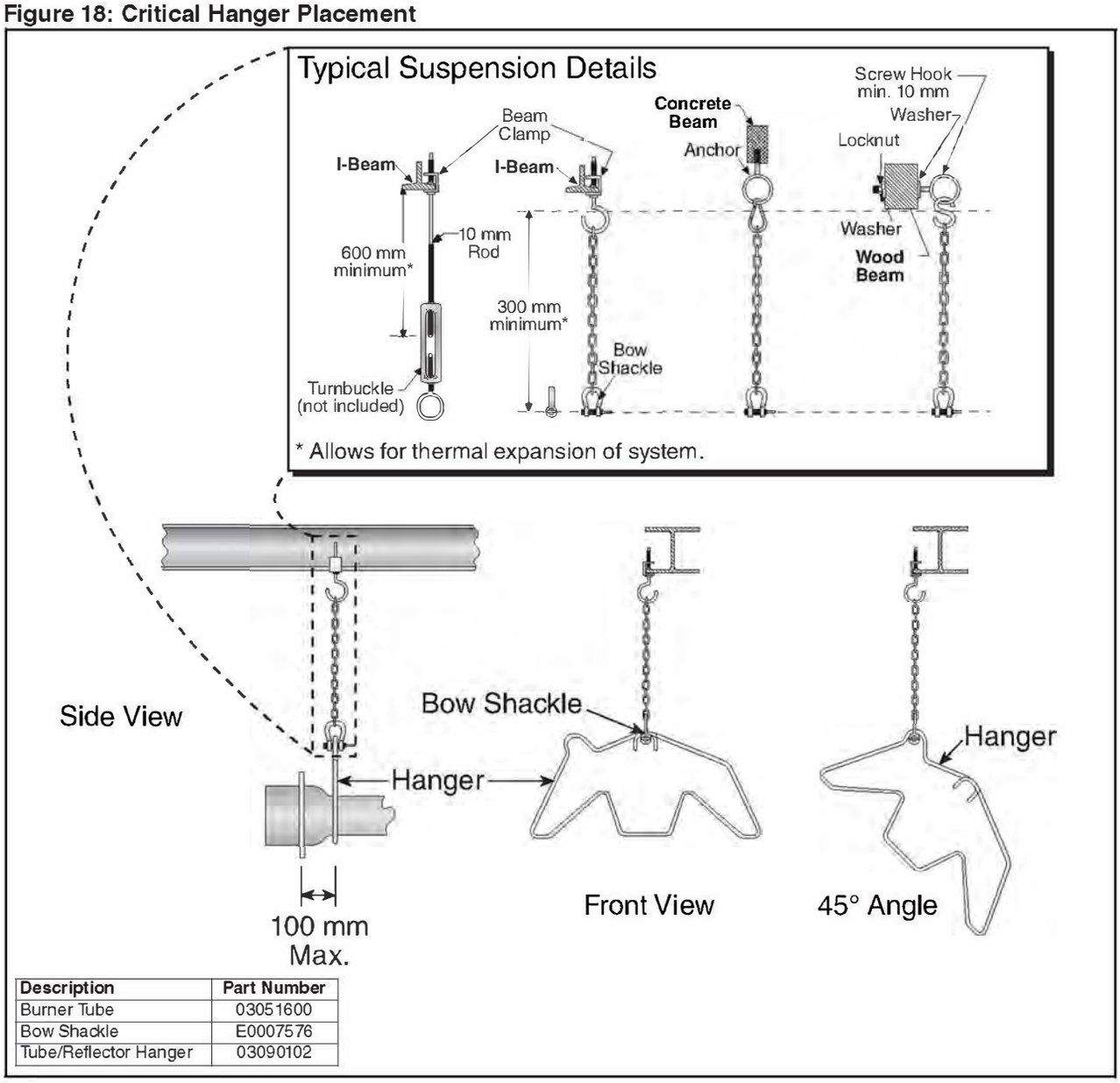

Description	Part Number
Burner Tube	03051600
Bow Shackle	E0007576
Tube/Reflector Hanger	03090102

For suspension angles other than shown, additional chain supports may be required.

All appliances are supplied as standard with adjustable wire suspension kits - 1 per hanger.

SECTION 6: LINEAR & DOUBLE LINEAR HEATER INSTALLATION

⚠ WARNING

Cut/Pinch Hazard

Wear protective gear during installation, operation and service.

Edges are sharp.

Failure to follow these instructions can result in injury.

The figures in this section provide a general overview of component placement in a Linear and Double Linear system. The location of some components such as supports and couplings is crucial for proper installation. Assemble the heater components as shown *on Page 14, Figure 19*.

For optional reflector configurations for linear heaters *see Page 8, Figure 3 through Page* 11, *Figure 10*. Install appropriate suspension hardware, beam clamps, chain or rod at predetermined locations. Adjustments of chain length will provide uniform pitch.

If any step is unclear, please contact Combat Heating Solutions Limited at +44 (0)121 506 7700.

Outside of the UK, please contact your local agent / distributor.

6.1 Linear Standard Parts List

Part No.	Description	CMP15ST	CMP20ST	CMP25ST	CMP30ST	CMP35ST	CMP40ST	CMP45ST	CMP50ST
072XXXXX	Burner Assembly (Input and Fuel Varies)	1	1	1	1	1	1	1	1
07260001	Fan Package XP 1	1	1	1	1	-	-	-	-
07260002	Fan Package XP2	-	-	-	-	1	1	1	-
07260003	Fan Package XP 3	-	-	-	-	-	-	-	1
07260004	Linear Package	1	1	1	1	1	1	1	1
03051600	Burner Tube, 100 mm x 3048 mm	1	1	1	1	1	1	1	1
91409408	Tube, 100 mm x 3048 mm	-	1	1	2	2	2	3	3
S5127W	Fan Tube, 100 mm x 3048 mm, with 3048 mm Swirler	-	1	1	1	1	1	1	1
S5134W	Fan Tube, 100 mm x 3048 mm, with 2134 mm Swirler	1	-	-	-	-	-	-	-
01329600	Standard Coupling Assembly	1	2	2	3	3	3	4	4
01329700	Coupling Lock	1	2	2	3	3	3	4	4
02750313	Reflector, Aluminium, 2439 mm	3	4	4	6	6	6	7	7
02705802	Reflector End Cap, Aluminium	2	2	2	2	2	2	2	2
03090102	Tube and Reflector Hanger	3	4	4	5	5	5	6	6
01318902	Tube Clamp Package (including Nut, Washer & Bolt)	1	1	1	1	1	1	1	1
91908004	Wire Form	2	3	3	5	5	5	6	6
94320812	Screw #8 x 3/4 (3.9 mm x 19 mm), (goes with 03050002)	4	6	6	10	10	10	12	12
03050002	Reflector Support Strap	2	3	3	5	5	5	6	6
E0007576	Bow Shackle**	3	4	4	5	5	5	6	6
91107720	U-Clip Package (20 Pieces)	1	1	1	1	1	1	1	1
S7199K	Damper Flange Assembly (For use on Multiburner Systems)	1 Per Heater							

Figure 19: Linear General Assembly Overview

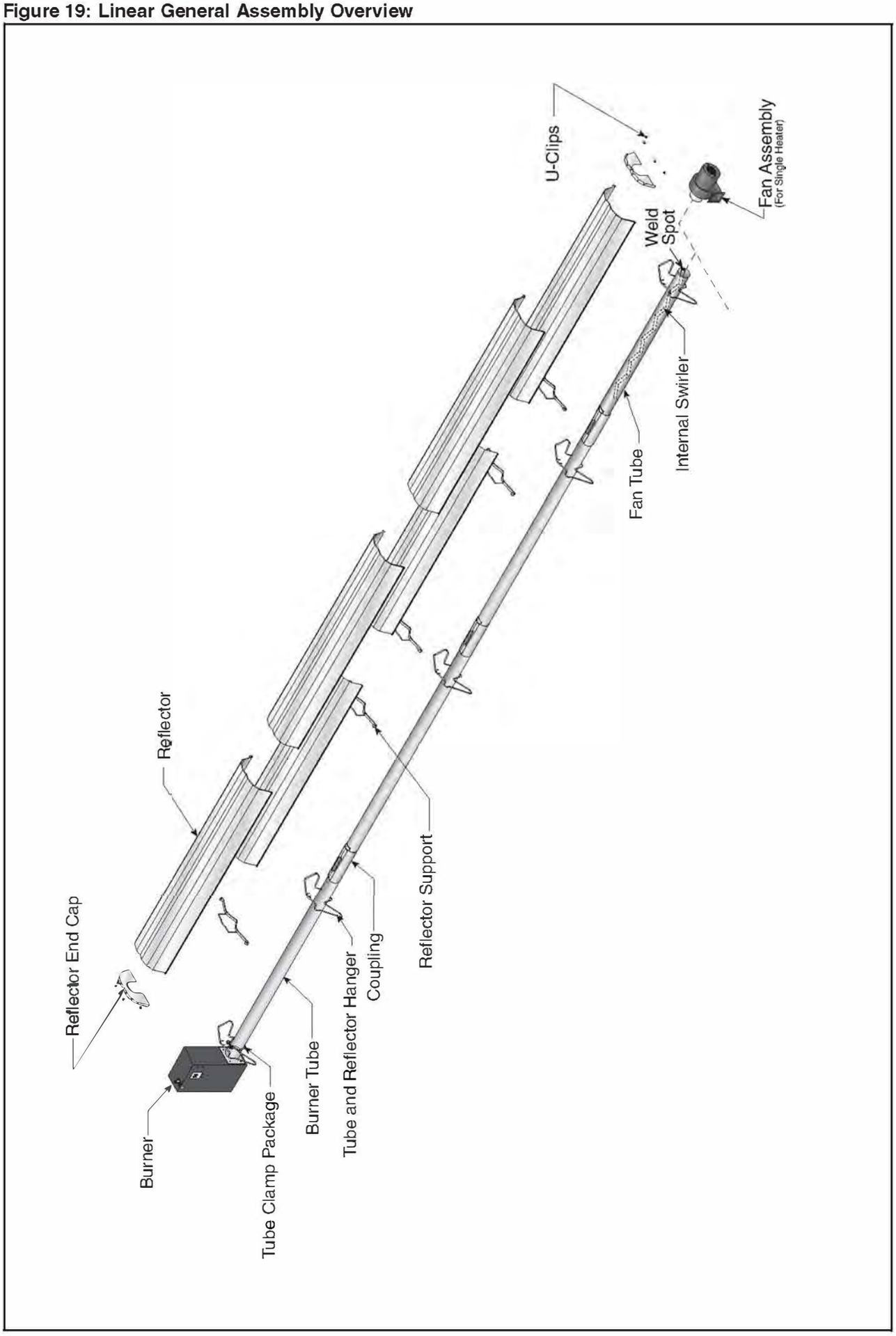

Figure 20: Linear Layout Overview

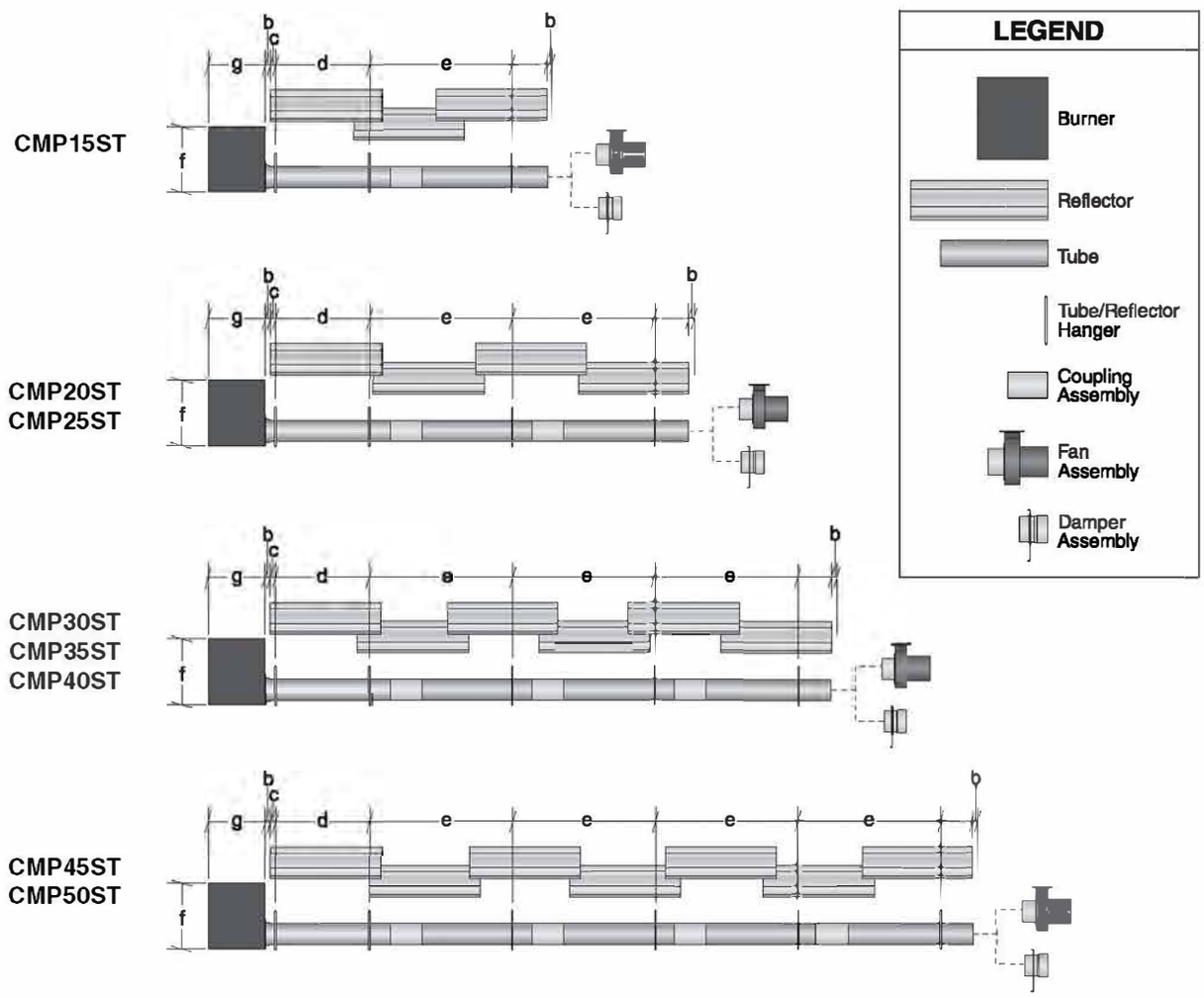

a = reflector width (not shown) - 508 mm
b = end cap to burner/fan - 50 mm
c = end cap to hanger - 50 mm
d = distance first hanger - 2290 mm
e = distance typical between hangers - 3050 mm
f = burner height - 366 mm
g = burner length - 291 mm

Model	CMP15 ST	CMP20 ST	CMP25ST	CMP30ST	CMP35ST	CMP40ST	CMP45ST	CMP50ST
Reflector Overlap (approx.)	700 mm	250 mm	250 mm	530 mm	530 mm	530 mm	330 mm	330 mm

6.2 Double Linear Standard Parts List

Part No.	Description	CMP30DL	CMP40DL	CMP50DL	CMP60DL	CMP70DL
072XXXXX	Burner Assembly (Input and Fuel Varies)	2	2	2	2	2
07260002	Fan Package XP2	1	1	-	-	-
07260003	Fan Package XP 3	-	-	1	1	1
07260004	Linear Package	2	2	2	2	2
03051600	Burner Tube, 100 mm x 3048 mm	2	2	2	2	2
91409408	Tube, 100 mm x 3048 mm	-	2	2	4	4
S5127W	Fan Tube, 100 mm x 3048 mm, with 3048 mm Swirler	-	2	2	2	2
S5134W	Fan Tube, 100 mm x 3048 mm, with 2134 mm Swirler	2	-	-	-	-
01330203	Tee, 100 mm x 100 mm x 100 mm	1	1	1	1	1
01329600	Standard Coupling Assembly	4	6	6	8	8
01329700	Coupling Lock	4	6	6	8	8
02750313	Reflector, Aluminium, 2439 mm	6	8	8	12	12
02750802	Reflector End Cap, Aluminium	4	4	4	4	4
03090102	Tube and Reflector Hanger	6	8	8	10	10
01318902	Tube Clamp Package (including Nut, Washer & Bolt)	2	2	2	2	2
91908004	Wire Form	4	6	6	10	10
03050002	Reflector Support Strap	4	6	6	10	10
E0007576	Bow Shackle	6	8	8	10	10
91107720	U-Clip Package (20 Pieces)	2	2	2	2	2
E0007582	Height Adjuster	6	8	8	10	10
94320812	Screw #8 x 3/4 (3.9 mm x 19 mm), (goes with 03050002)	8	12	12	20	20

Figure 21: Double Linear General Assembly Overview

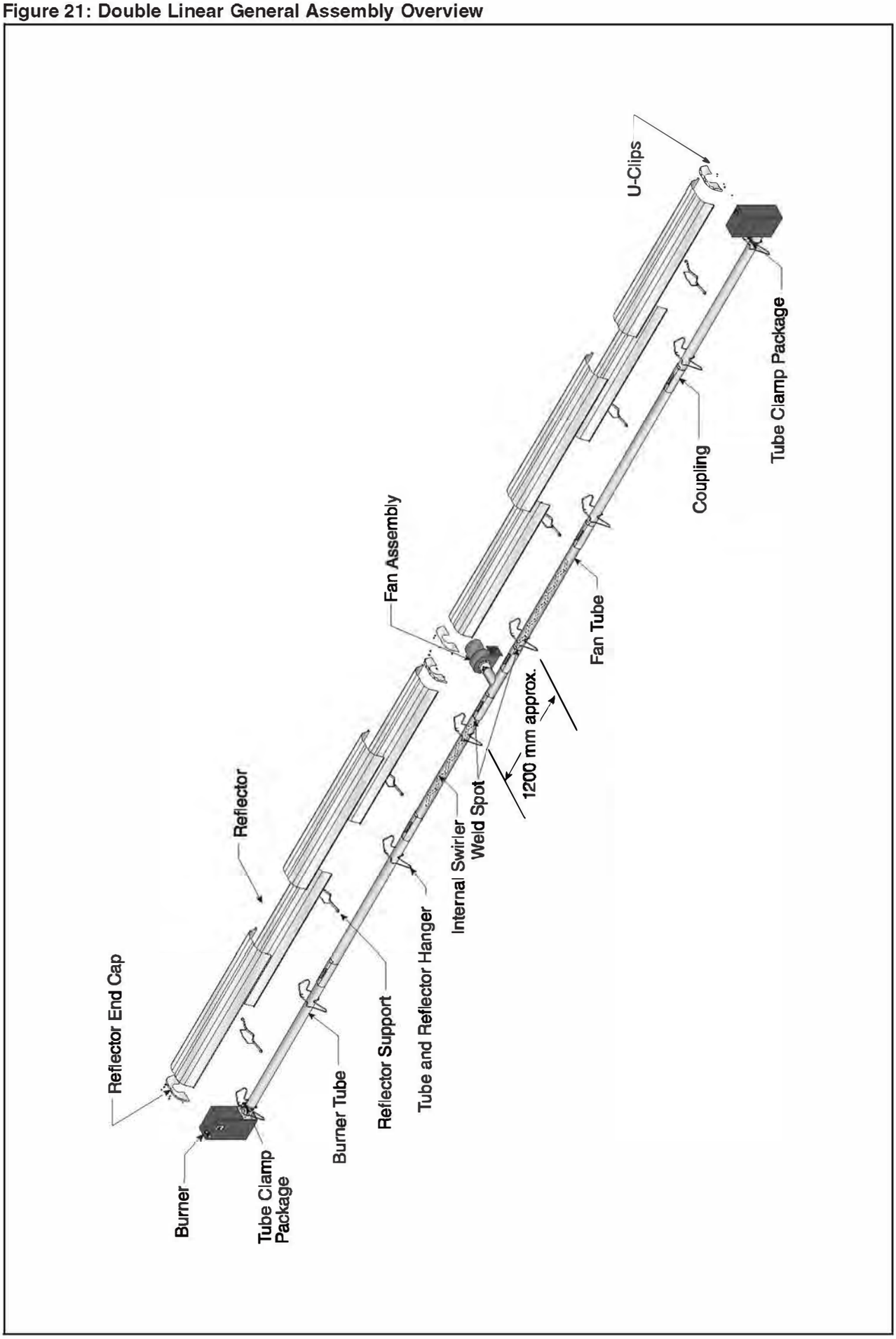

Figure 22: Double Linear Layout Overview

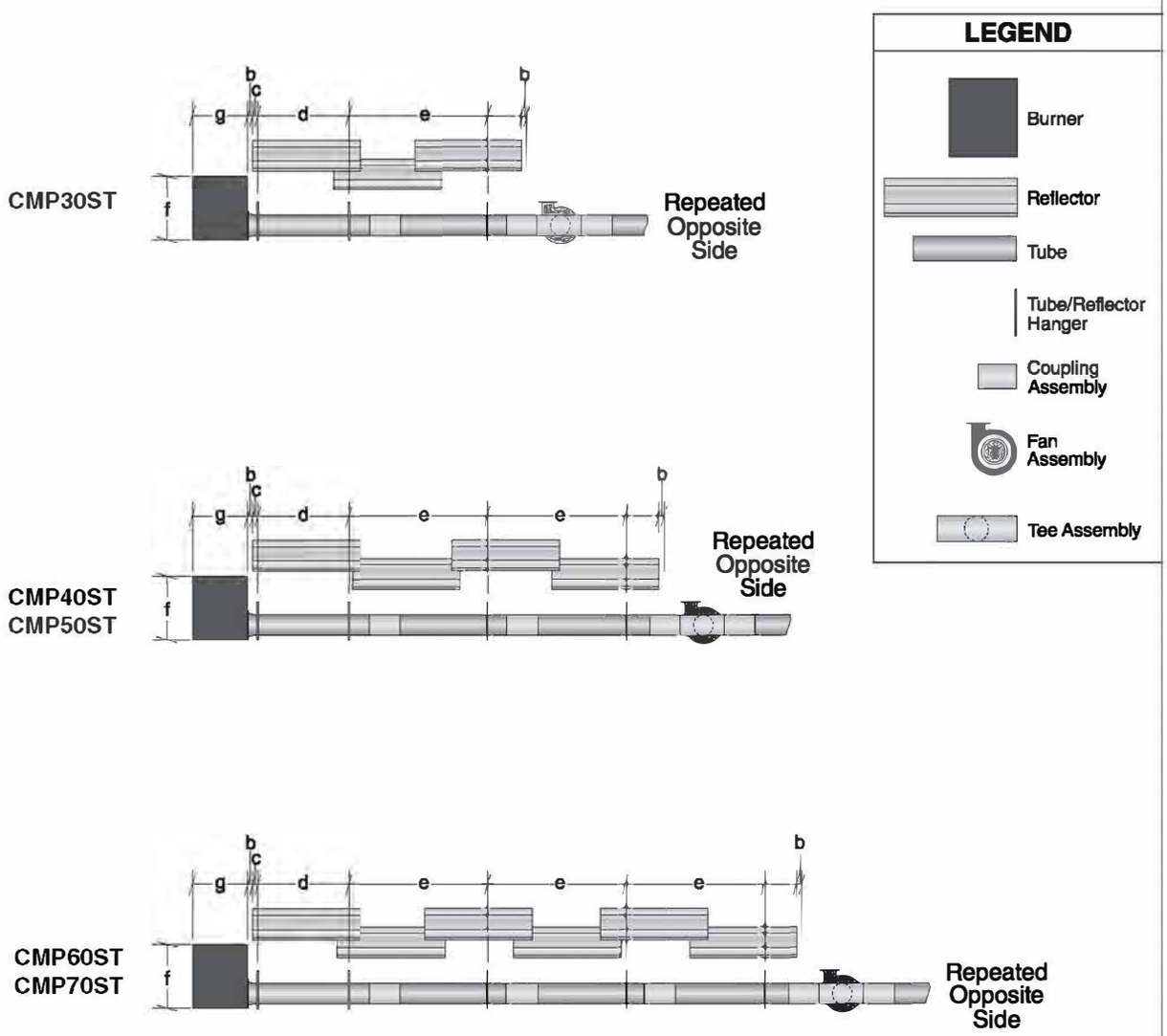

a = reflector width (not shown) - 508 mm
b = end cap to burner/fan - 50 mm
c = end cap to hanger - 50 mm
d = distance first hanger - 2290 mm
e = distance typical between hangers - 3050 mm
f = burner height - 366 mm
g = burner length - 291 mm

Model	CMP30DL	CMP40DL	CMP50DL	CMP60DL	CMP70DL
Reflector Overlap (approx.)	700 mm	250 mm	250 mm	530 mm	530 mm

Step 6.3 Burner Tube Installation

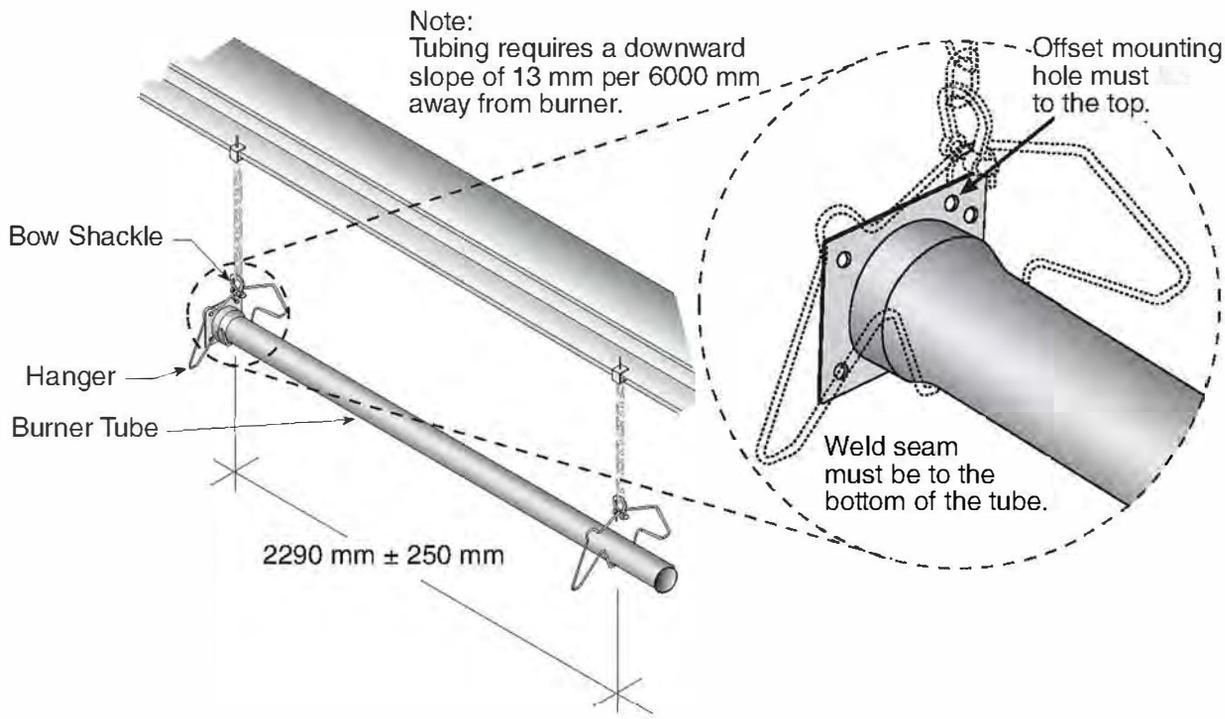

Description	Part Number
Burner Tube	03051600
Bow Shackle	E0007576
Tube/Reflector Hanger	03090102

Step 6.4 Coupling and Tube Assembly

A Close coupling with tab.

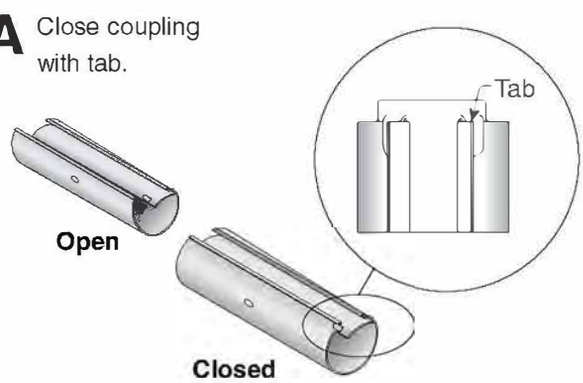

B Start slide bar/coupling lock onto coupling.

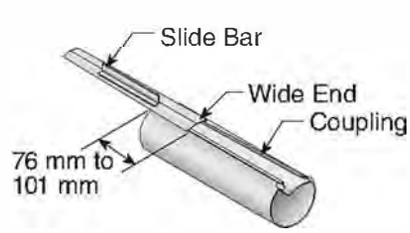

C Insert tubes into coupling.

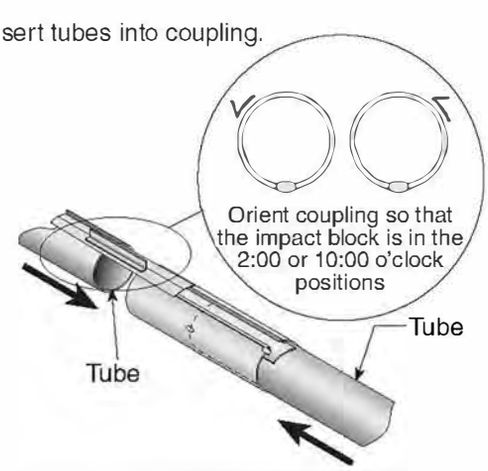

D Tighten coupling to join tubes.

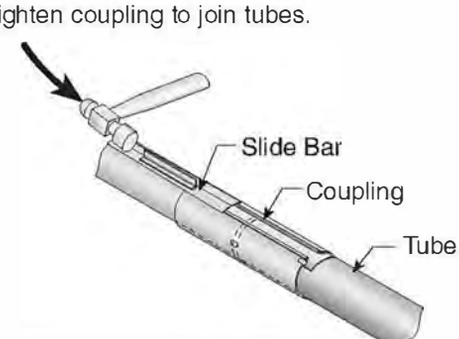

Description	Part Number
Coupling	01329600
Slide Bar/Coupling Lock	01329700
Tube	91409408

Step 6.4.1 Coupling and Tube Assembly (Continued)

Tighten slide bar as shown below.

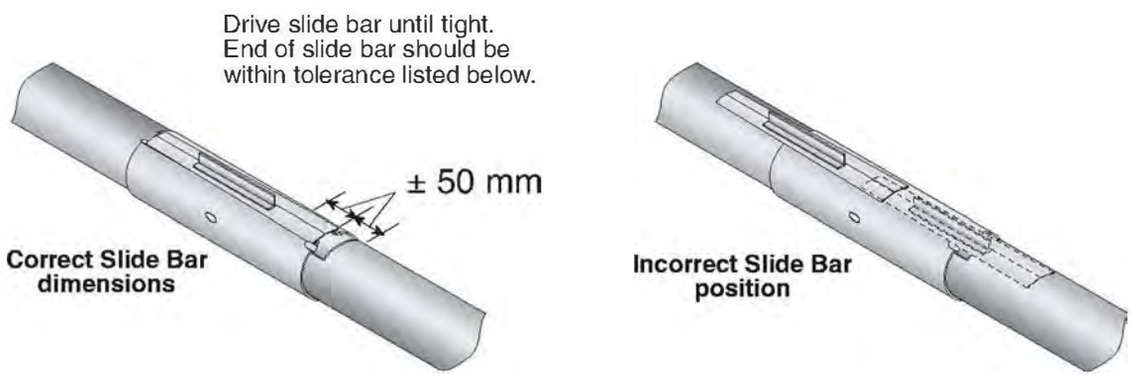

- **Repeat *Step 6.4* A - D until all tubes are assembled. *See Page 20, Section 6.4.2* shown below.**

Step 6.4.2 Coupling and Tube Assembly (Continued)

Model	Overall Tube Length (mm)	Number of Tubes
CMP15ST	6,000	2
CMP20ST	9,000	3
CMP25ST	9,000	3
CMP30ST	12,000	4
CMP35ST	12,000	4
CMP40ST	12,000	4
CMP45ST	15,000	5
CMP50ST	15,000	5

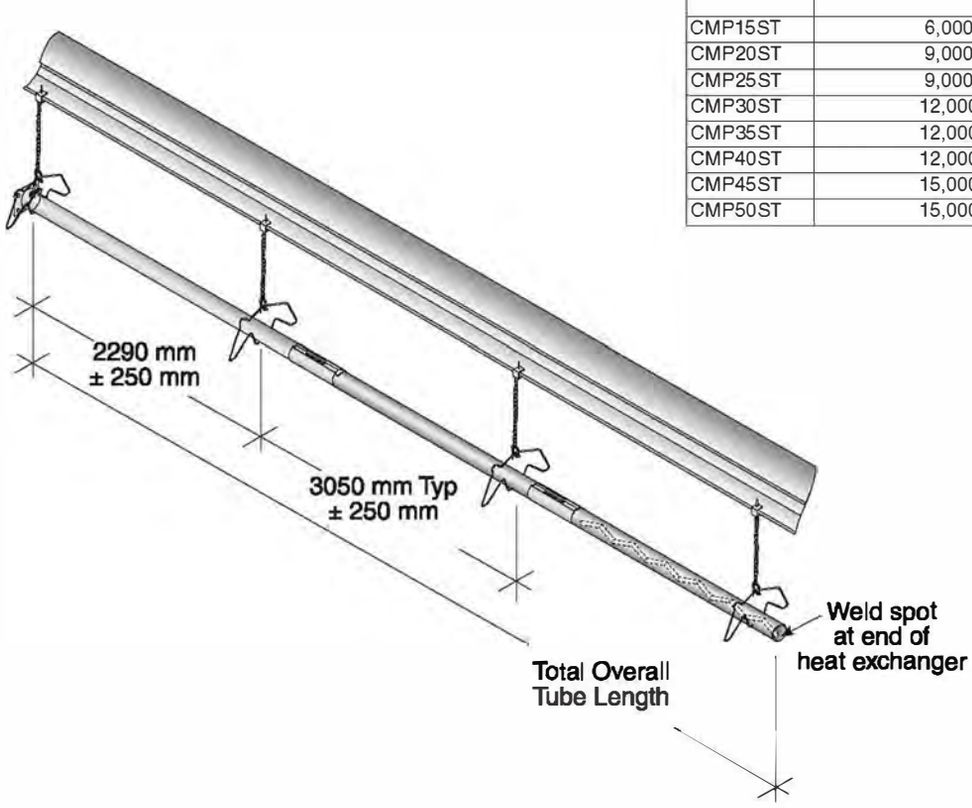

Step 6.5 Tube Clamp Package Installation

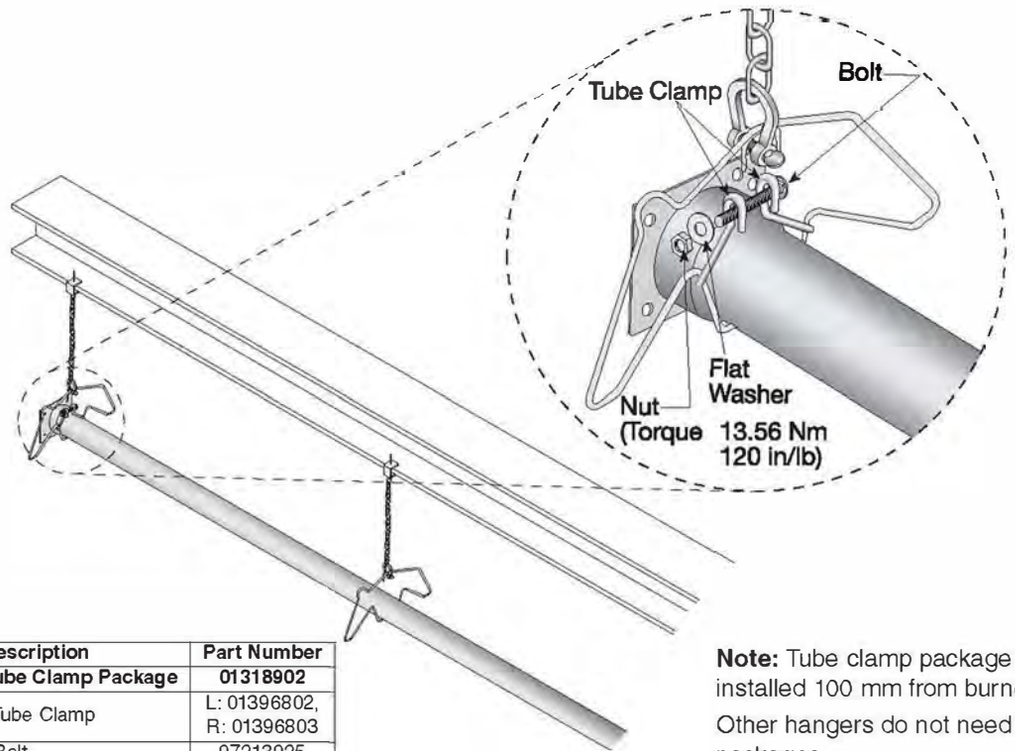

Description	Part Number
Tube Clamp Package	**01318902**
Tube Clamp	L: 01396802, R: 01396803
Bolt	97213925
Flat Washer	95211600
Nut	92113900
Lockwasher	96411600

Note: Tube clamp package should be installed 100 mm from burner tube plate. Other hangers do not need tube clamp packages.

Step 6.6 Reflector Installation

⚠ WARNING

Fire Hazard

Support reflector with reflector hanger and support strap.

Reflector must not touch tube.

Failure to follow these instructions can result in death, injury or property damage.

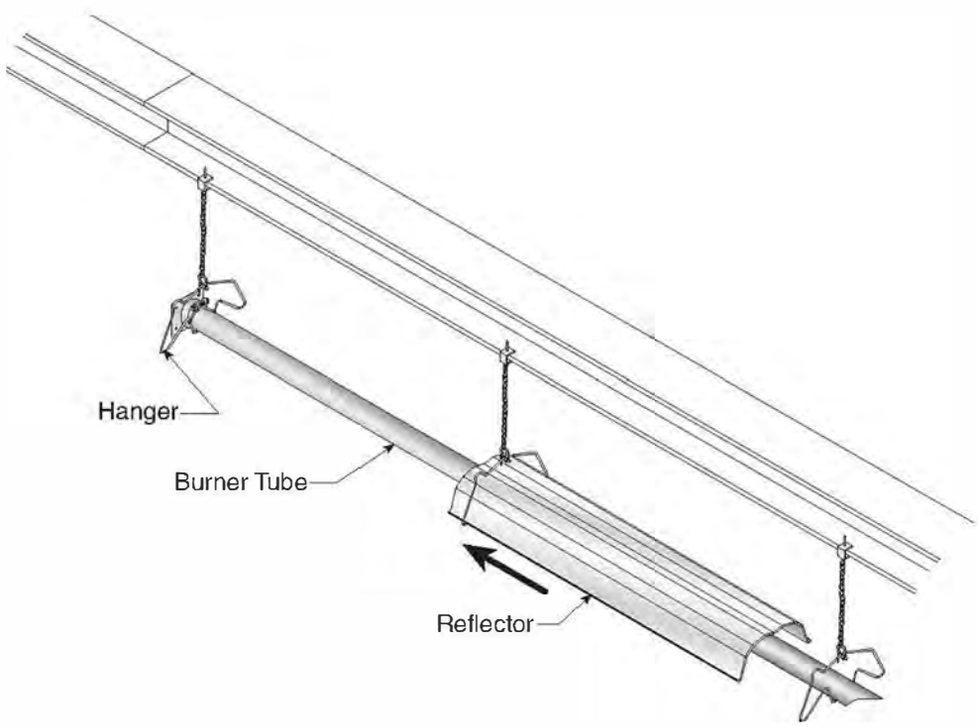

Description	Part Number
Tube/Reflector Hanger	03090102
Burner Tube	03051600
Reflector	02750313

Step 6.6.1 Reflector, U-Clip and Reflector Support Installation

The pictorial drawings of the heater construction in *Section 6* are schematic only and provide a general guideline of where hangers, reflector supports and U-clips are to be installed.

To ensure proper expansion and contraction movement of the reflectors, a combination of U-clips and reflector supports are used. The positioning of reflector supports and U-clips depend on the individual installation. Use either pop rivets or sheet metal screws instead of U-clips when installing end caps and joint pieces in areas where impact and high wind may be a factor.The following rules must be observed:

1. The first reflector after the burner must be affixed in the middle of the reflector with a reflector support and tight screws.

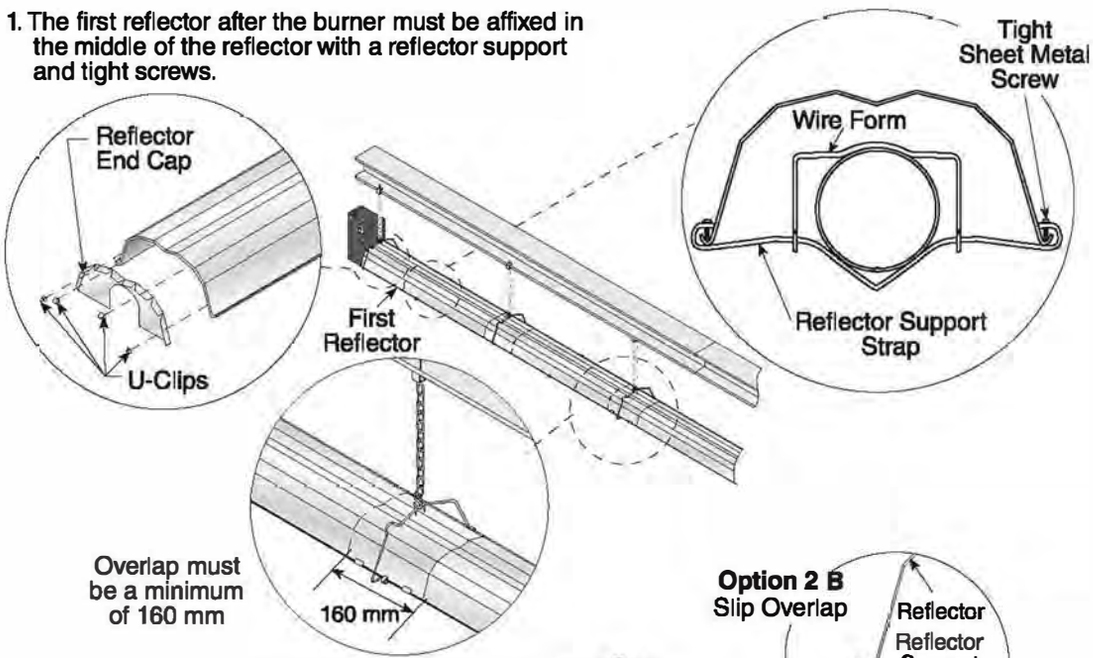

2. The overlap at the first and second reflector is a slip overlap. Thereafter, every third reflector joint is a slip overlap. A slip overlap is achieved by either:
   a.) both reflectors lay inside a hanger. (no reflector support needed).
   b.) using a reflector support with loose screws at the reflector overlap.

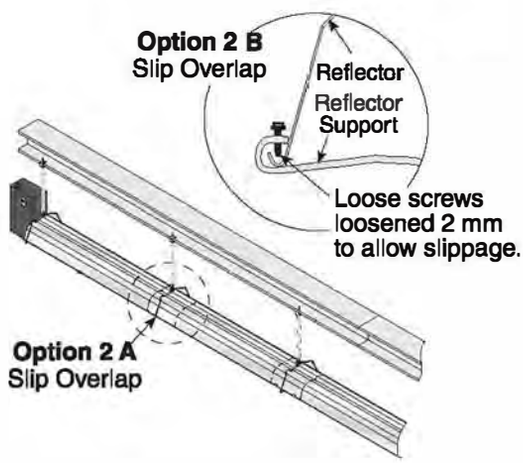

3. The remaining reflector overlaps require a non-slip overlap connection. To affix the reflectors together in a non-slip overlap either:
   a.) use reflector support and tight screws.
   b.) if both reflectors lay inside a hanger, u-clips or sheet metal screws may be used.

   This section of three reflectors joined together must be affixed to the tube with at least one reflector support with tight screws.

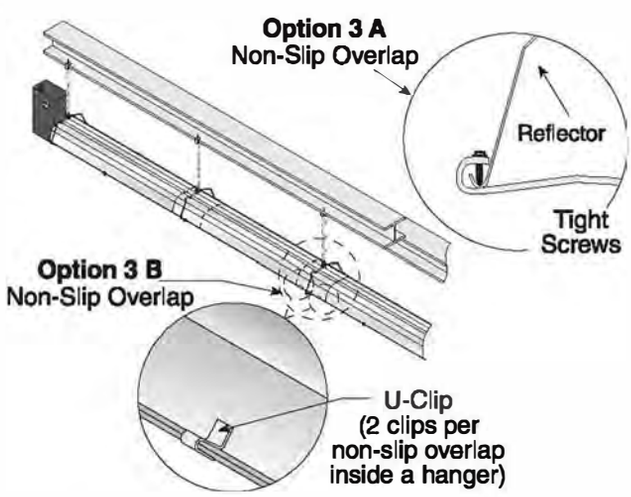

Description	Part Number
Reflector Support Package	**03050012**
Wire Form	91908004
Reflector Support Strap	03050002
Screw #8 x 3/4	94320812
U-Clip Package	91107720
Reflector End Cap	02750802

Step 6.7 Double Linear Tee Installation (for double linear heaters only)

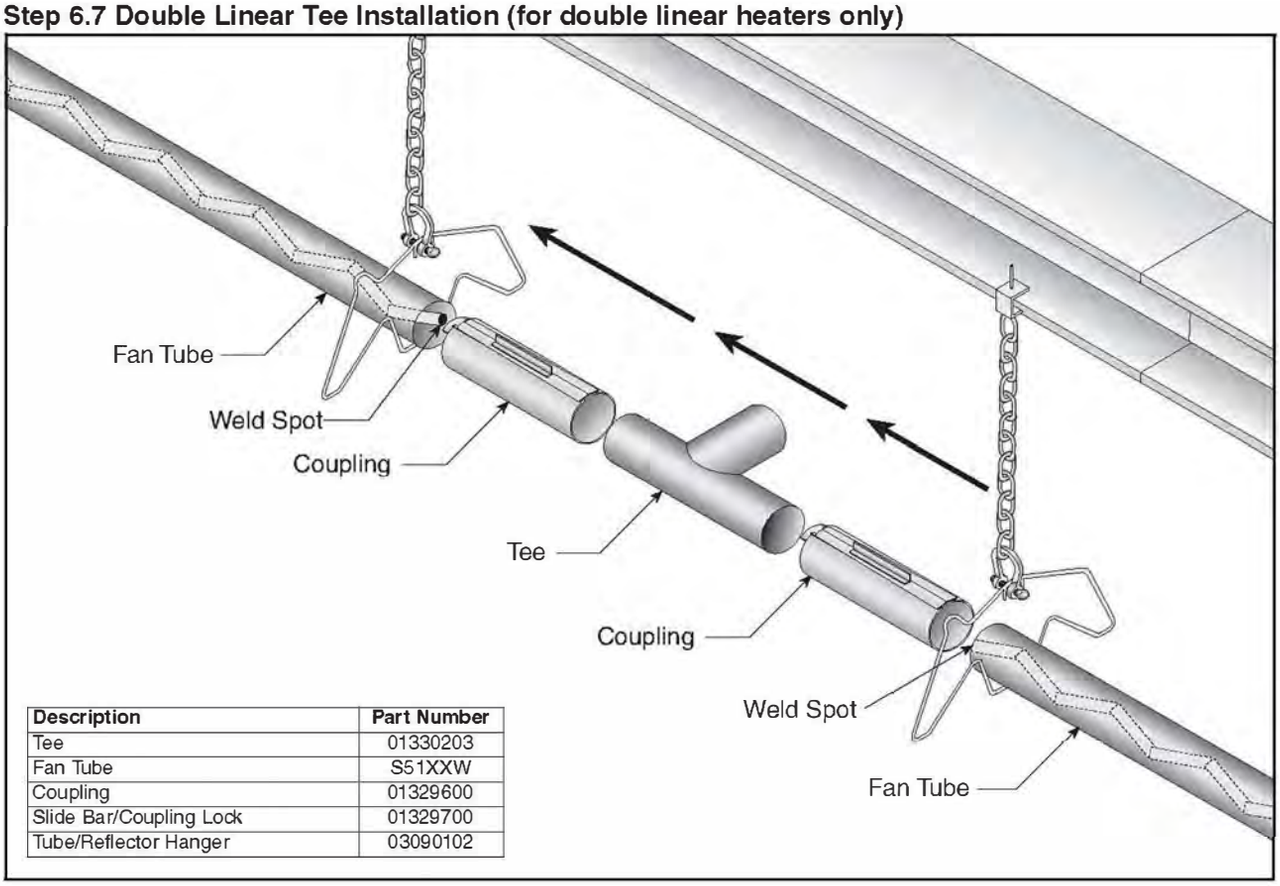

Description	Part Number
Tee	01330203
Fan Tube	S51XXW
Coupling	01329600
Slide Bar/Coupling Lock	01329700
Tube/Reflector Hanger	03090102

SECTION 7: U-TUBE HEATER INSTALLATION

⚠ WARNING

Cut/Pinch Hazard

Wear protective gear during installation, operation and service.

Edges are sharp.

Failure to follow these instructions can result in injury.

The figures in this section provide a general overview of component placement in a U-tube system. The location of some components such as supports and couplings is crucial for proper installation. Assemble the heater components as shown *on Page* 29, *Figure 23*.

For optional reflector configurations for U-tube heaters, *See Page 10, Figure 11 through Page 11, Figure 17*. Install appropriate suspension hardware, beam clamps, chain or rod at predetermined locations. Adjustments of chain length will provide uniform pitch.

If any step is unclear, please contact Combat Heating Solutions Limited at +44(0)121 506 7700.

If outside the UK, please contact your local agent / distributor.

7.1 U-Tube Standard Parts List

Part No.	Description	CMP15UT	CMP20UT	CMP25UT CMP25UT	CMP30UT CMP30UT	CMP35UT CMP35UT	CMP40UT CMP40UT	CMP45UT CMP45UT	CMP50UT CMP50UT
072XXXXX	Burner Assembly (Input and Fuel Varies)	1	1	1	1	1	1	1	1
07260001	Fan Package XP1	1	1	1	1	-	-	-	-
07260002	Fan Package XP2	-	-	-	-	1	1	1	-
07260003	Fan Package XP3	-	-	-	-	-	-	-	1
03051600	Burner Tube, 100 mm x 3048 mm	1	1	1	1	1	1	1	1
91409408	Tube, 100 mm x 3048 mm	-	-	-	2	2	2	2	2
91409423	Tube, 100 mm x 1524 mm	-	2	2	-	-	-	2	2
S5127W	Fan Tube, 100 mm x 3048 mm, with 3048 mm Swirler	-	1	1	1	1	1	1	1
S5134W	Fan Tube, 100 mm x 3048 mm, with 2134 mm Swirler	1	-	-	-	-	-	-	-
01335911	U-Bend	1	1	1	1	1	1	1	1
01329600	Standard Coupling Assembly	2	4	4	4	4	4	6	6
01329700	Coupling Lock	2	4	4	4	4	4	6	6
02750313	Reflector, Aluminium, 2439 mm	4	4	4	6	6	6	8	8
02750802	Reflector End Cap, Aluminium	4	4	4	4	4	4	4	4
03090102	Tube and Reflector Hanger	4	6	6	6	6	6	8	8
01318902	Tube Clamp Package (including Nut, Washer & Bolt)	1	1	1	1	1	1	1	1
91908004	Wire Form	2	4	4	4	4	4	6	6
03050002	Reflector Support Strap	2	4	4	4	4	4	6	6
03020511	U-Bend Support Bracket	1	1	1	1	1	1	1	1
E0007576	Bow Shackle**	4	6	6	6	6	6	8	8
91107720	U-Clip Package (20 Pieces)	2	2	2	2	2	2	2	2
91912501	U-Bolt M6	2	2	2	2	2	2	2	2
C0090B	Nut M6	6	6	6	6	6	6	6	6
96411500	Lockwasher 6 mm	6	6	6	6	6	6	6	6

Part No.	Description	CMP15UT	CMP20UT	CMP25UT	CMP30UT	CMP35UT	CMP40UT	CMP45UT	CMP50UT
94320812	Screw #8 x 3/4 (3.9 mm x 19 mm), (goes with 03050002)	4	8	8	8	8	8	12	12
S7199K	Damper Flange Assembly (For use on Multiburner Systems)	1 Per Heater							

Figure 23: U-Tube Assembly Overview

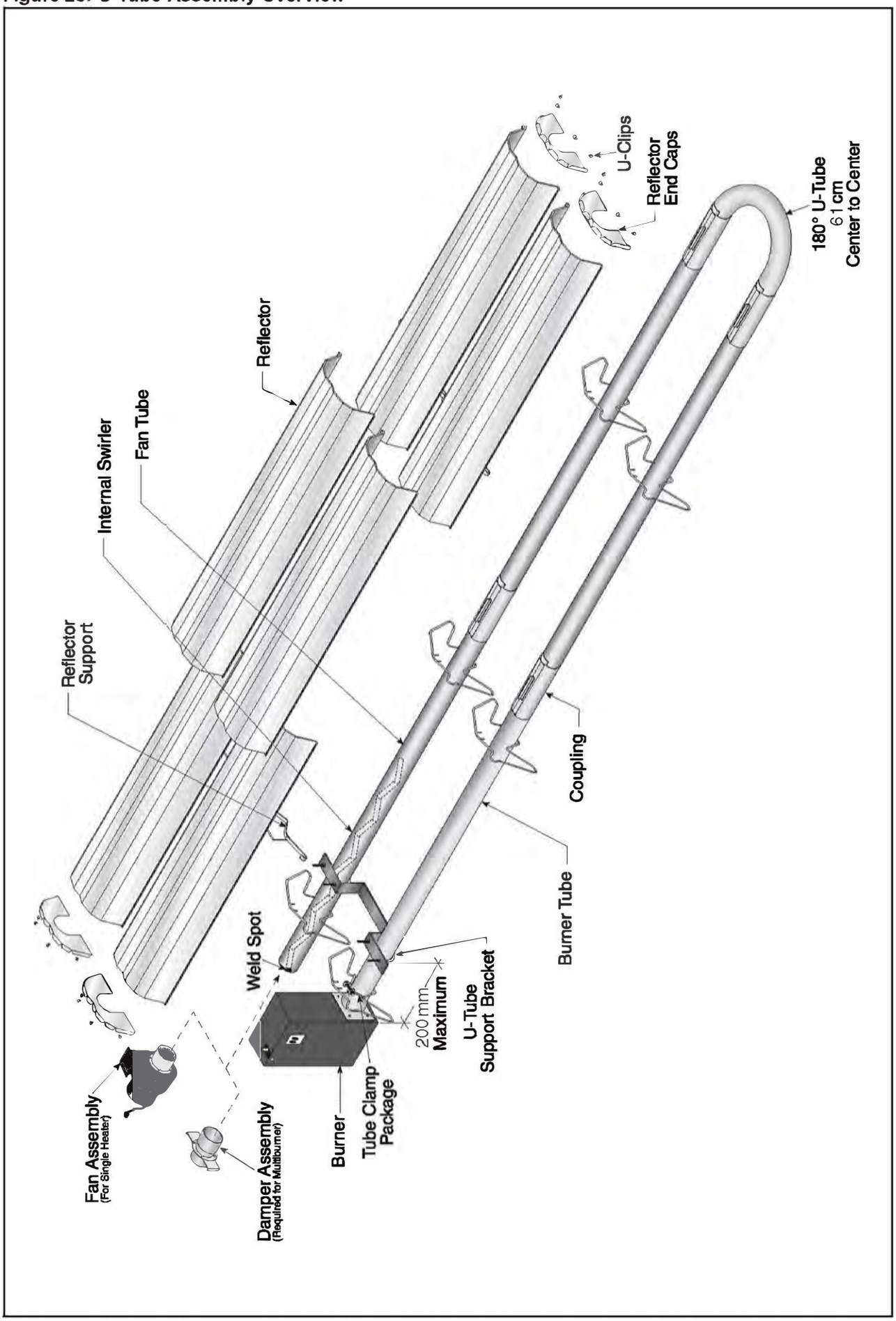

Figure 24: U-Tube Layout Overview

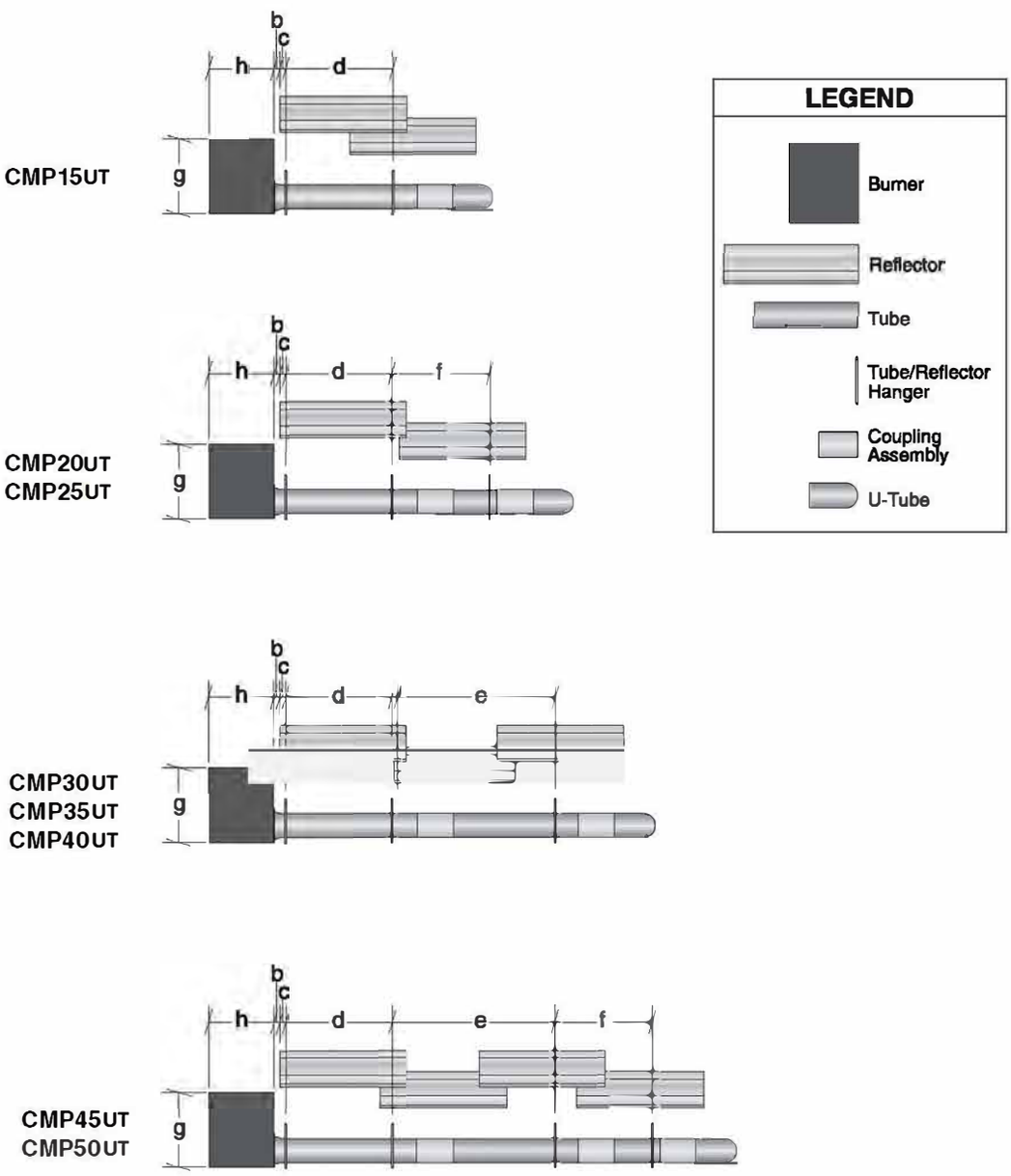

a = overall width (not shown) - 1118 mm
b = end cap to burner/fan - 50 mm
c = end cap to hanger - 50 mm
d = distance first hanger - 2290 mm
e = distance typical between hangers - 3050 mm
f = distance between last full tube hanger and half tube hanger - 1900 mm
g = burner height - 366 mm
h = burner length - 291 mm

Model	CMP15 UT	CMP20 UT	CMP25UT	CMP30UT	CMP35UT	CMP40UT	CMP45UT	CMP50UT
Reflector Overlap (approx.)	1780 mm	250 mm	250 mm	580 mm	580 mm	580 mm	690 mm	690 mm

Step 7.2 U-Tube Hanger Placement

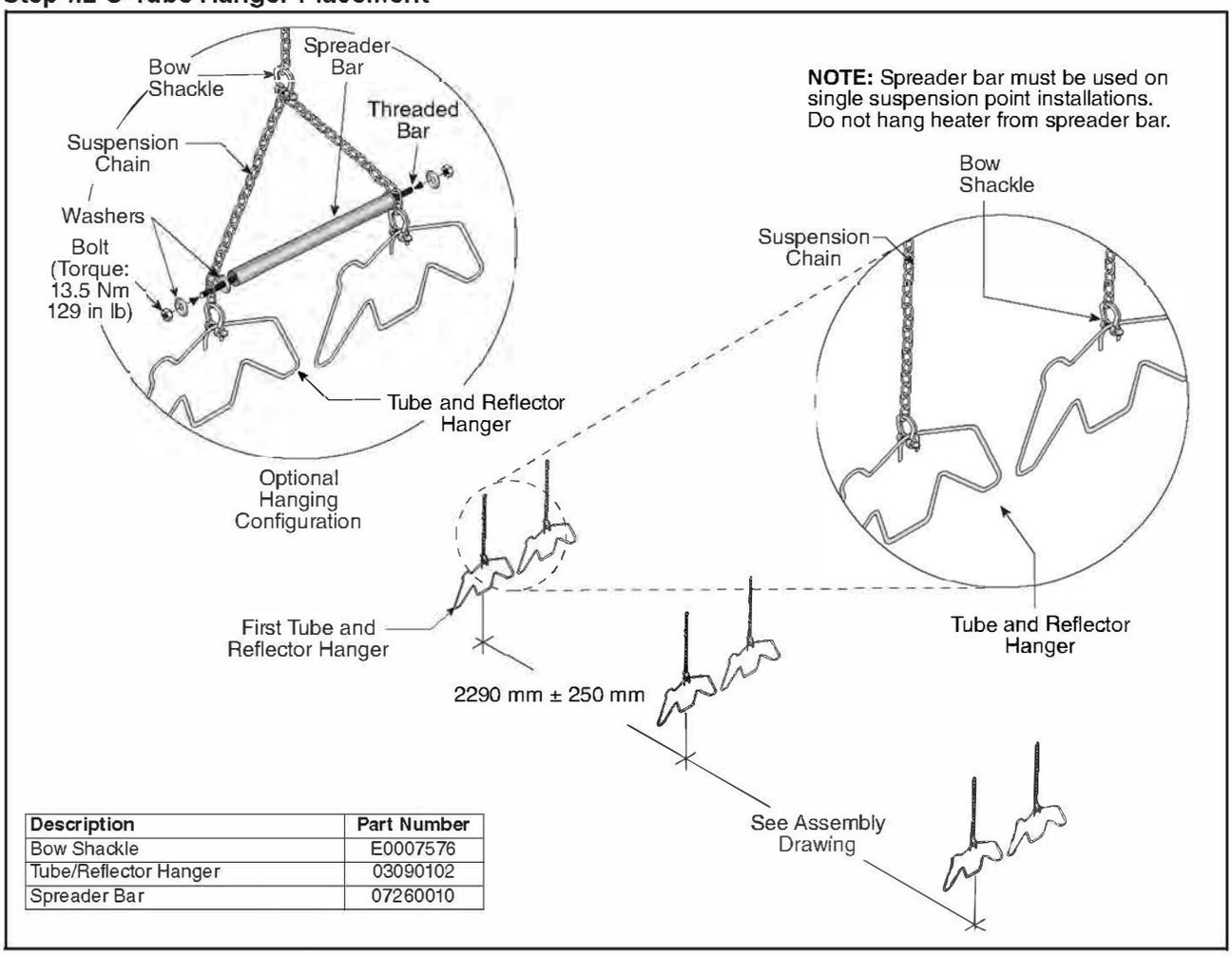

Description	Part Number
Bow Shackle	E0007576
Tube/Reflector Hanger	03090102
Spreader Bar	07260010

Step 7.3 Burner Tube and Fan Tube Installation

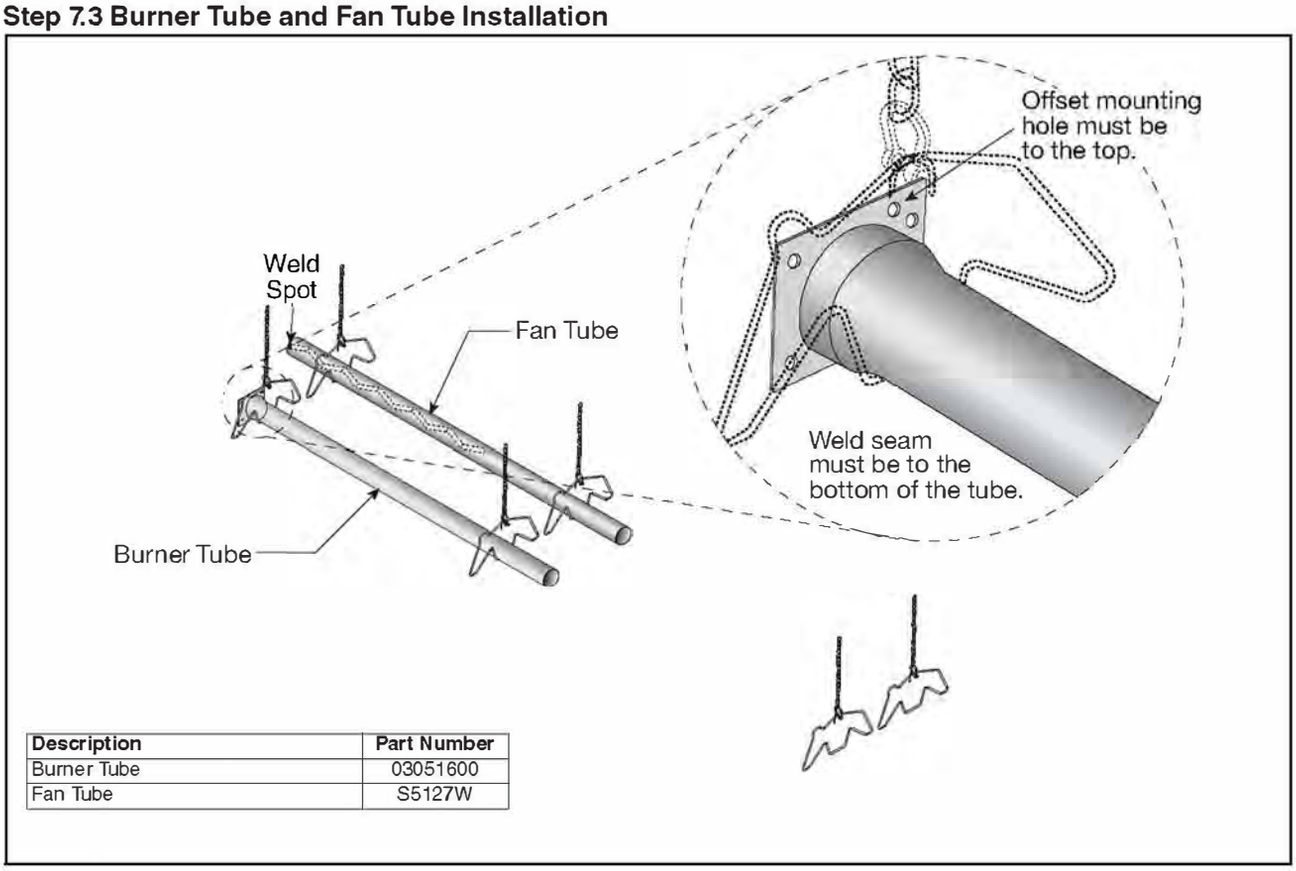

Description	Part Number
Burner Tube	03051600
Fan Tube	S5127W

Step 7.3.1 Tube Clamp Package Installation

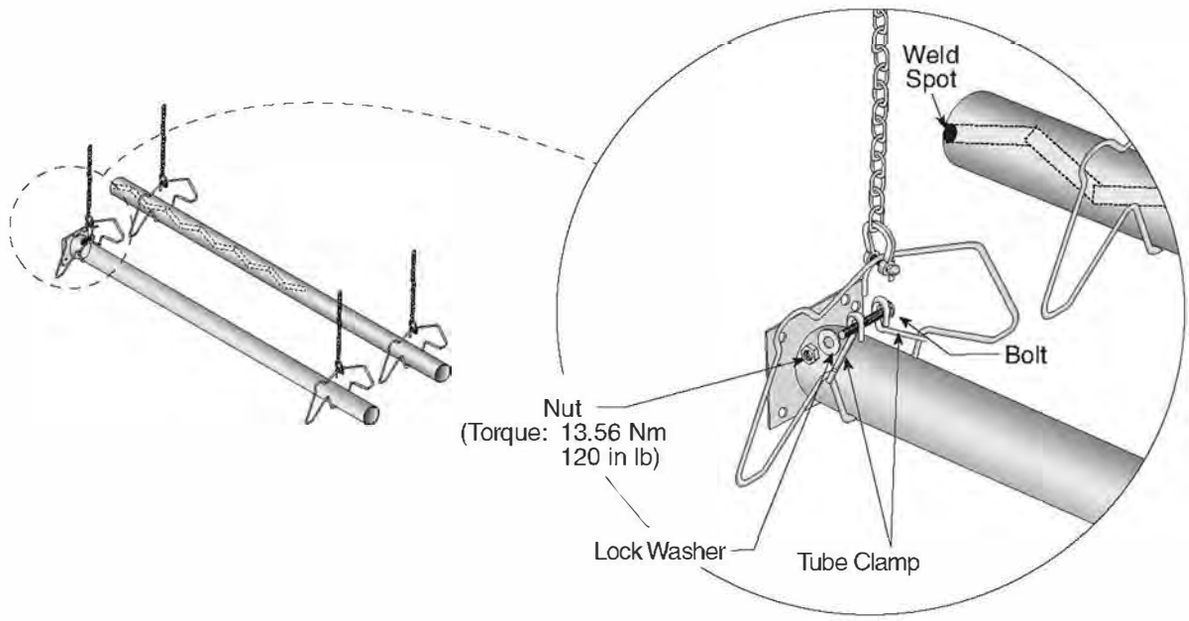

Description	Part Number
Tube Clamp Package	**01318902**
Tube Clamp	L: 01396802, R: 01396803
Bolt	97213925
Flat Washer	95211600
Nut	92113900
Lockwasher	96411600

Note: Tube clamp package should be installed 100 mm from burner tube plate. Other hangers do not need tube clamp packages.

Step 7.4 U-Tube Support Bracket Assembly Installation

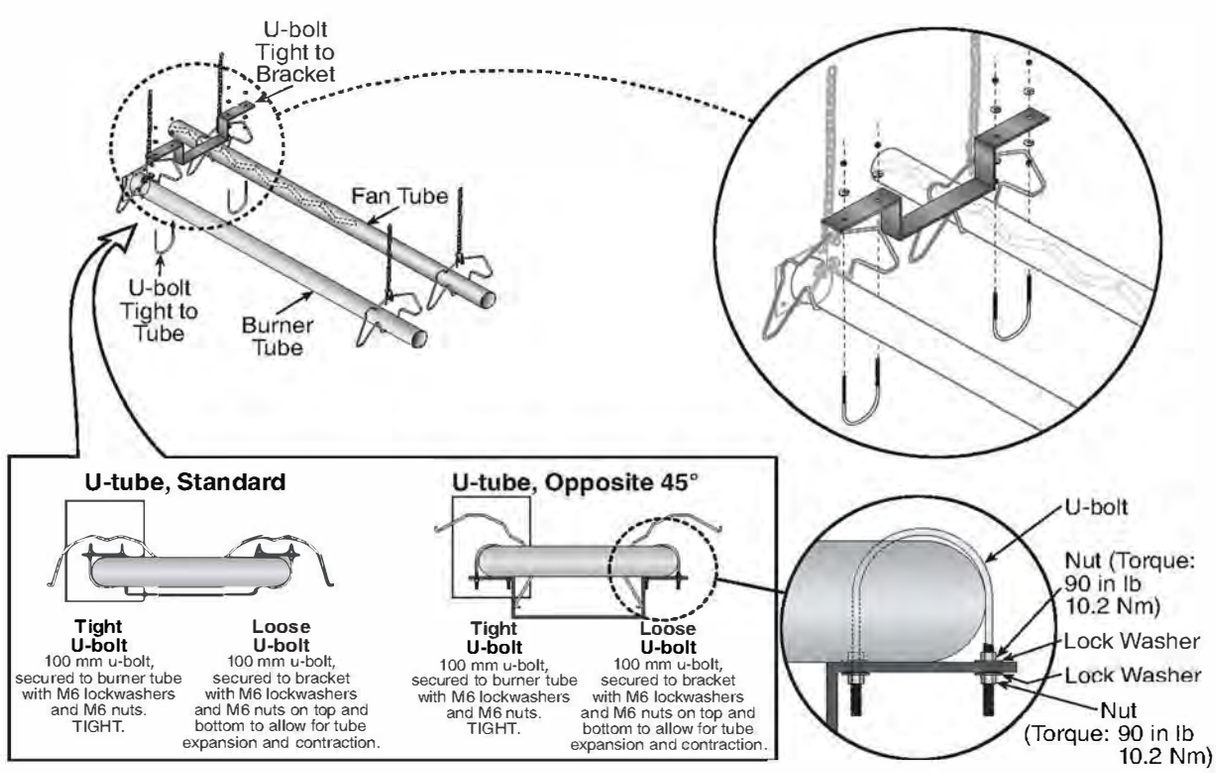

Step 7.5 Coupling and Tube Assembly

A Close coupling with tab.

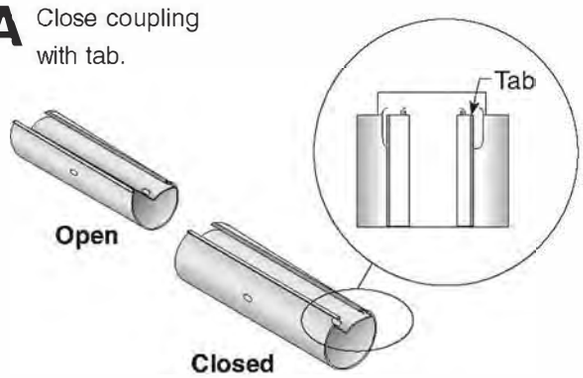

B Start slide bar/coupling lock onto coupling.

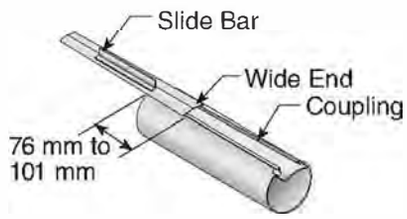

C Insert tubes into coupling.

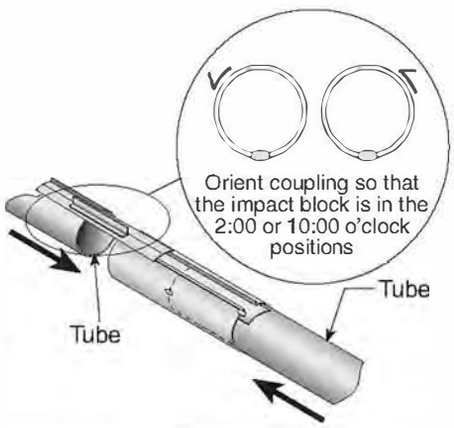

D Tighten coupling to join tubes.

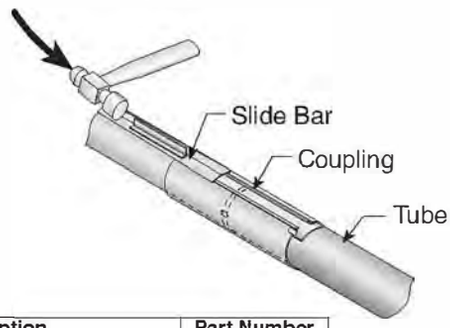

Description	Part Number
Coupling	01329600
Slide Bar/Coupling Lock	01329700
Tube	91409408

Step 7.5.1 Coupling and Tube Assembly (Continued)

Tighten slide bar as shown below.

Drive slide bar until tight.
End of slide bar should be within tolerance listed below.

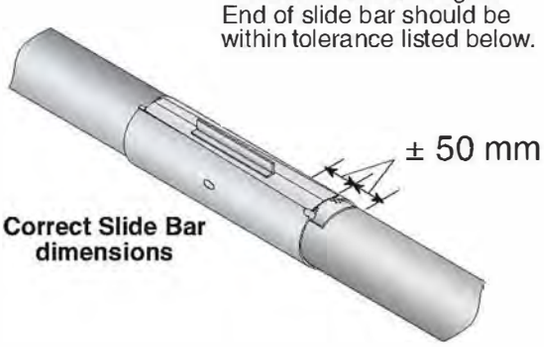

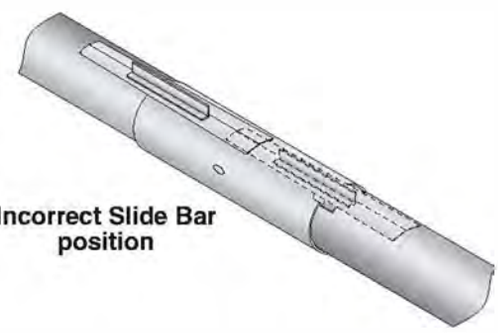

- **Repeat *Step 7.5* A - D until all tubes are assembled.**

Step 7.6 Tube Installation

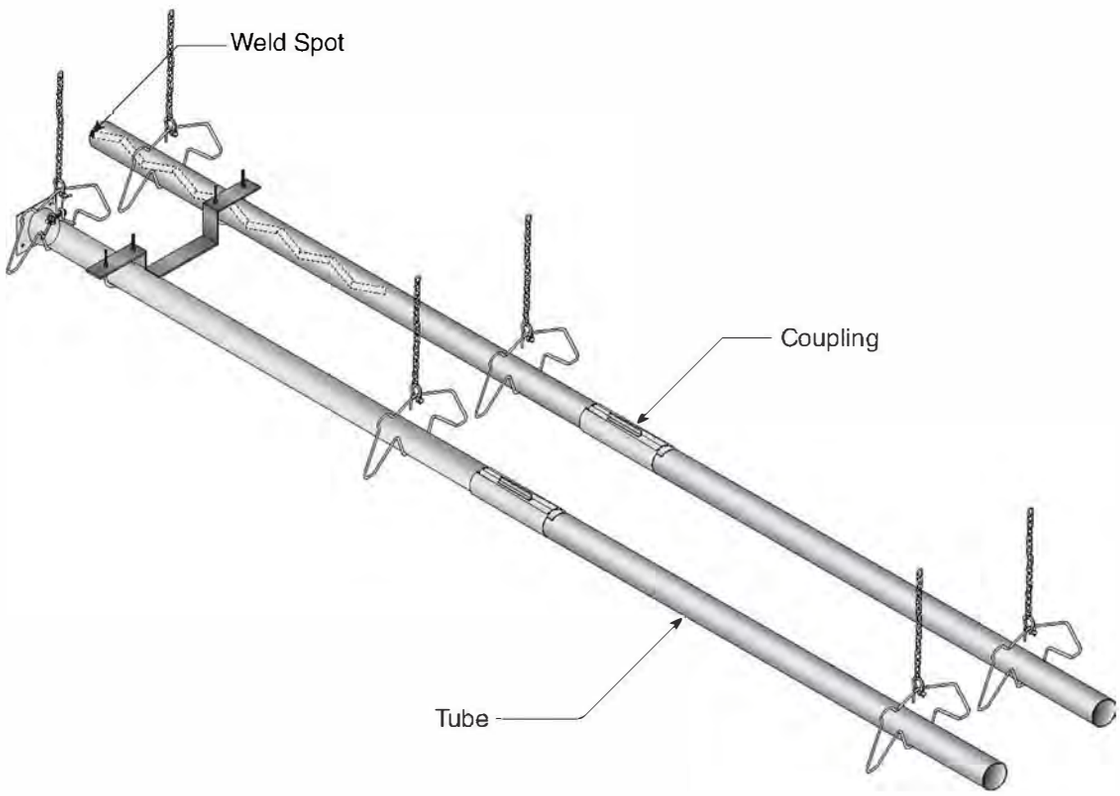

Step 7.7 U-Tube Installation

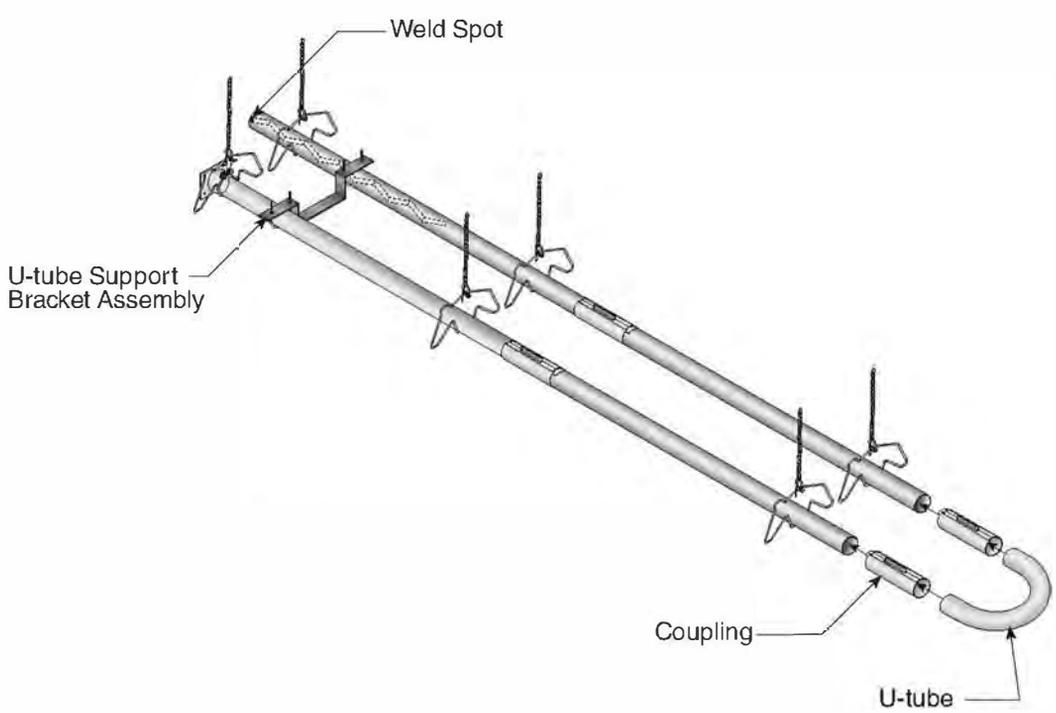

Description	Part Number
Coupling	01329600
Slide Bar/Coupling Lock	01329700
U-Tube	01335911

Step 7.8 Reflector Installation

⚠ WARNING

Fire Hazard

Support reflector with reflector hanger and support strap.

Reflector must not touch tube.

Failure to follow these instructions can result in death, injury or property damage.

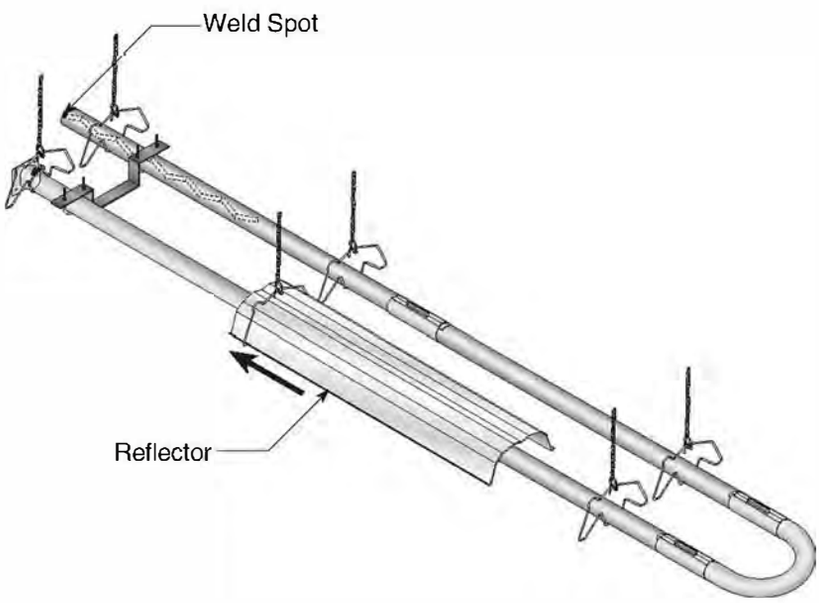

Description	Part Number
Reflector	02750313

Step 7.8.1 Reflector, U-Clip and Reflector Support Installation

The pictorial drawings of the heater construction in *Section 6* are schematic only and provide a general guideline of where hangers, reflector supports and U-clips are to be installed.

To ensure proper expansion and contraction movement of the reflectors, a combination of U-clips and reflector supports are used. The positioning of reflector supports and U-clips depend on the individual installation. Use either pop rivets or sheet metal screws instead of U-clips when installing end caps and joint pieces in areas where impact and high wind may be a factor. The following rules must be observed:

1. The first reflector after the burner must be affixed in the middle of the reflector with a reflector support and tight screws.

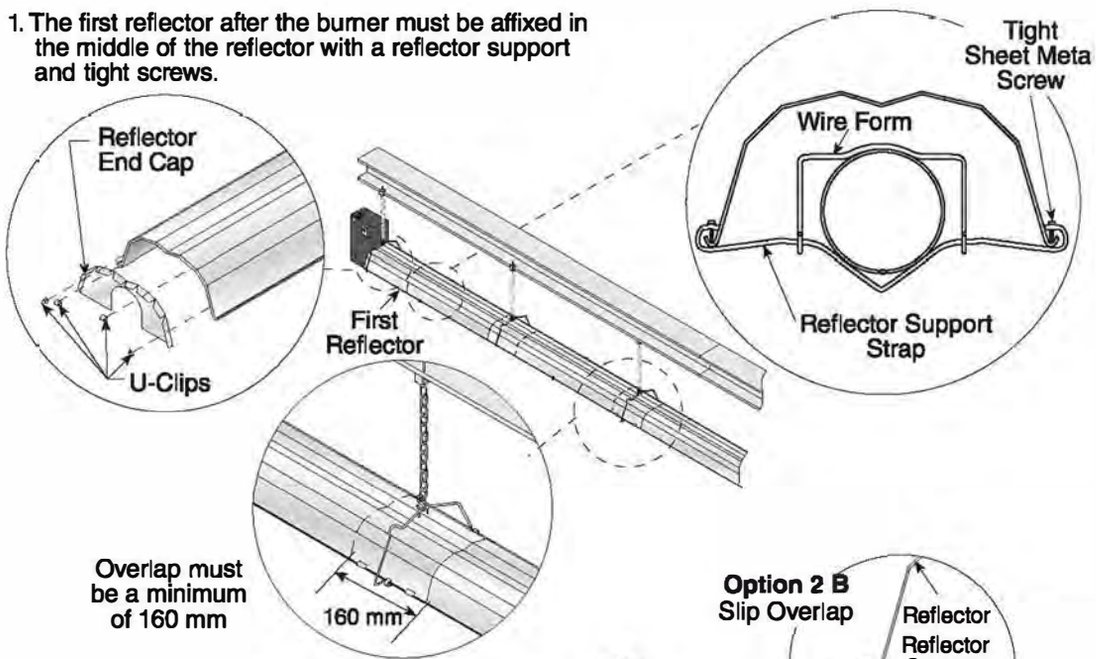

2. The overlap at the first and second reflector is a slip overlap. Thereafter, every third reflector joint is a slip overlap. A slip overlap is achieved by either:
   a.) both reflectors lay inside a hanger. (no reflector support needed).
   b.) using a reflector support with loose screws at the reflector overlap.

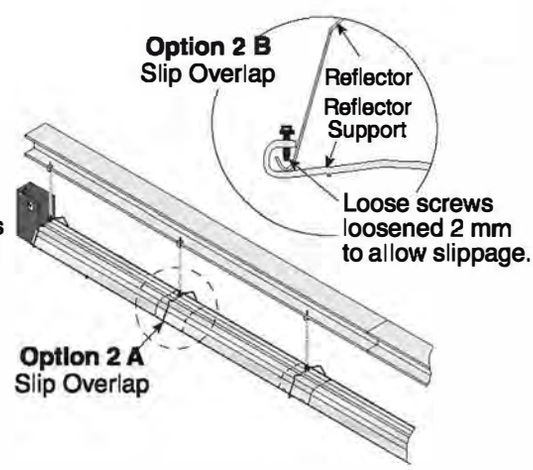

3. The remaining reflector overlaps require a non-slip overlap connection. To affix the reflectors together in a non-slip overlap either:
   a.) use reflector support and tight screws.
   b.) if both reflectors lay inside a hanger, u-clips or sheet metal screws may be used.

   This section of three reflectors joined together must be affixed to the tube with at least one reflector support with tight screws.

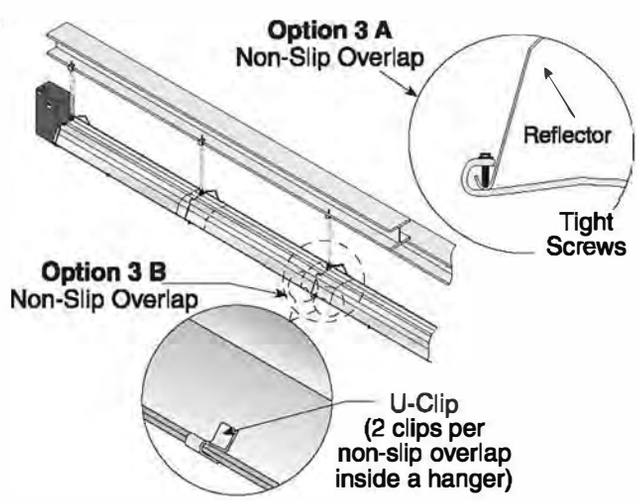

Description	Part Number
Reflector Support Package	**03050012**
Wire Form	91908004
Reflector Support Strap	03050002
Screw #8 x 3/4 (3.9 x 19 mm)	94320812
U-Clip Package	91107720
Reflector End Cap	02750802

SECTION 8: MULTIBURNER CONFIGURATION & INSTALLATION

⚠ WARNING

Severe Injury Hazard

Secure burner to burner tube with nuts and lockwashers.

Hang heater with materials with a minimum working load of 75 lbs (33 kg).

Failure to follow these instructions can result in death, injury or property damage.

⚠ WARNING

Cut/Pinch Hazard

Wear protective gear during installation, operation and service.

Edges are sharp.

Failure to follow these instructions can result in injury.

8.1 Initial Assembly

See Page 15, Section 6 for linear heater assembly instructions.

See Page 27, Section 7 for U-tube heater assembly instructions.

Check layout drawings for location of manifold pipe installation.

AUSTRALIAN APPROVAL DOES NOT COVER MULTIBURNER INSTALLATIONS. IF REQUIRED, TYPE B EXEMPTION / APPROVAL MUST BE ARRANGED WITH LOCAL ENERGY AUTHORITY.

Figure 25: Multiburner Damper Flange Installation

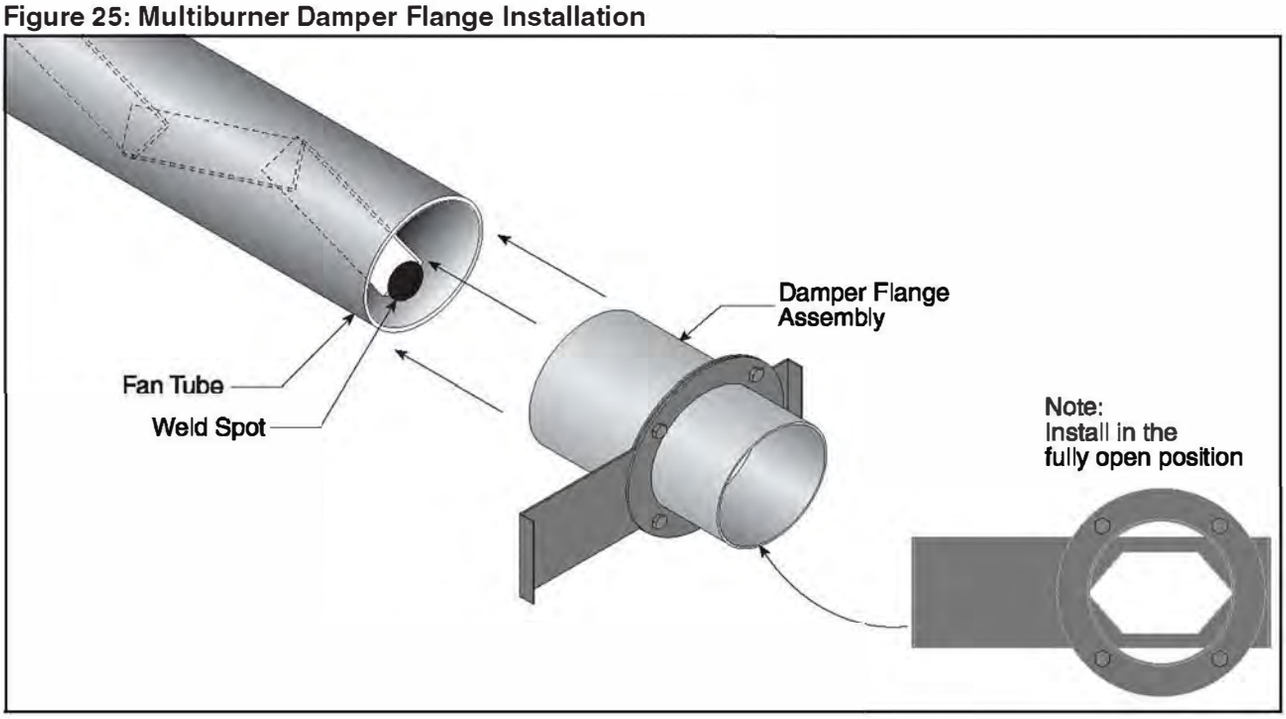
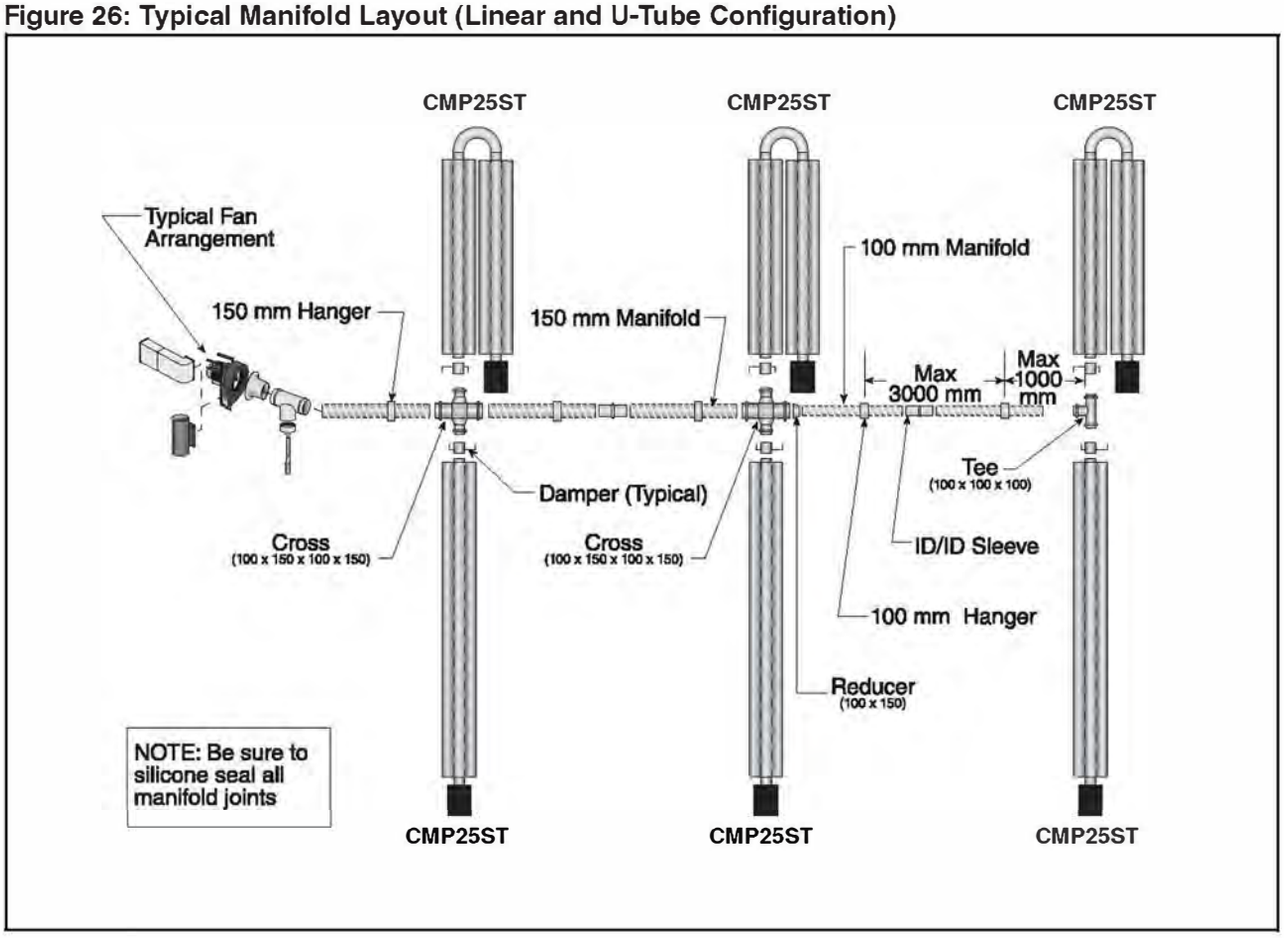
Figure 26: Typical Manifold Layout (Linear and U-Tube Configuration)